YOUR MOTORSPORTS JOURNEY BEGINS HERE

WWW.MCSCC.ORG

2024 General Competition Rules

Copyright © Midwestern Council of Sports Car Clubs 2024, all rights reserved

Revision D, April 12, 2024

Criteria for submitting CHANGE requests to the Midwestern Council Board of Directors for changes to the current General Competition Rules:

1. Print the CURRENT page that you wish to have changed.
2. Using a RED pen. Strike through that text you wish to eliminate.
3. Clearly write out on a separate sheet of paper the verbiage you wish to have replaced in the RED Strike through areas.

Criteria for submitting ADDITION requests to the Midwestern Council Board of Directors for consideration to the current General Competition Rules.

1. Print the Current page that you would like to have the ADDITION located.
2. Identify with a RED pen the area that you believe is the best for your addition
3. On a separate sheet of paper, clearly write out your proposal making sure to identify the reason for the addition.
4. Please identify each new point with the correct numbering system as used within that specific area where you wish the addition to be located.

MCSCC 2024 Competition Schedule

April 27-28	Blackhawk Farms	LSCC/SCSCC Drivers School/Race
May 25-27	Blackhawk Farms	NSSCC HSAX/Enduro/Race
June 15-16	Grattan Raceway	WMR SCCA/MCSCC (co-hosted) Race/Race
June 29-30	Blackhawk Farms	GLSCC HSAX/Enduro/Race
July 27-28	Blackhawk Farms	MSCC Drivers School/Race
September 21-22	Gingerman Raceway	MSCC/SCSCC Enduro/Race
October 19-20	Blackhawk Farms	CSCC Loooong Race 54

GCR Change Log

Updated for 2024 GCR Rev. D:

HSAX new car classings and edits

Updated for 2024 GCR Rev. C:

New SMX class

Updated for 2024 GCR Rev. B:

ITS and ITR weight adjustments
Remove DP class

Updated for 2024 GCR Rev. A:

IT passenger seat
GT1/2 update
ST weight adjustments
SM updates

Updated for 2023 GCR Rev. E:

HSAX new car classings and edits

Updated for 2023 GCR Rev. D:

Added Grattan co-event with WMR SCCA in June
Added Mazda Protégé 5 in FP

Updated for 2023 GCR Rev. C:

Clarified new corner staff requirement for MPLs

Updated for 2023 GCR Rev. B:

Allow ethanol in fuel
Clarified false start (passing on pace lap) rule
Cleaned up sanction fee section

Updated for 2023 GCR Rev. A:

Added new corner staff requirement for new Novice licenses
Added VW and BMW entries to GP and ITGT classes respectively
Updated license renewal dates and fees

The Midwestern Council Story 1
Bylaws 2
General Regulations 9
Race Staff Personnel 9
1 Officials and Their Duties 9
2 Stewards Qualifications 11
3 Flagging and Communications 12
Competition Regulations 13
1. General Standards 13
2. General Regulations 14
3. Licenses 15
4. Protests 20
5. Penalties 22
6. Championship Points System 23
7. Race Starting Standards 24
8. Rules of the Pits 25
9. Rules of the Road 25
Safety Equipment 27
1. Equipment Condition 27
2. Helmets 27
3. Eye and Face Protection 27
4. Balaclavas 27
5. Driver's Suits 27
6. Gloves/Shoes 27
7. Driver Restraint Equipment 27
Automobiles – General Regulations 29
1. Eligibility 29
2. Fuel 29
3. Identification Marks 29
4. Advertisements on Automobiles 29
5. Mechanical Conditions of Automobiles 29
6. Weight and Track 29
7. Technical and Safety Inspection 29
8. Suitability for Competition 30
9. Annual Inspection 30
10. Classification of Non-Standard Vehicles 32
Stock Categories 34
Spec Miata 34
1. GCR 34
2. Purpose and Intent 34
3. Classification and Weight 34
4. Authorized Modifications 34
Spec Miata 2 42
1. GCR 42

2. Purpose and Intent 42
3. Classification and Weight 42
4. Authorized Modifications 42
Spec MX-5 42
1. GCR 42
2. Purpose and Intent 42
3. Definition 42
B-Spec Class 43
1. Definition 43
2. Automobile Eligibility 43
3. Classification 43
4. Technical and Safety Items 43
5. Vehicle Preparation 43
Improved Touring Categories 50
Improved Touring 50
1. GCR 50
2. Purpose 50
3. Intent 50
4. Specifications 50
5. Authorized Modifications 50
6. Reciprocating Engines (only) 50
7. Rotary Engines (only) 52
8. Engine Cooling System 52
9. Transmission/Final Drive 52
10. Chassis 52
11. Brakes 53
12. Wheels/Tires 53
13. Body/Structure 54
14. Driver/Passenger Compartment/Trunk 55
15. Safety 55
16. Other Eligibility 56
17. Improved Touring GT Specifications 57
18. Improved Touring R Specifications 58
19. Improved Touring S Specifications 59
20. Improved Touring A Specifications 60
21. Improved Touring B Specifications 62
22. Improved Touring C Specifications 64
23. Improved Touring D Specifications 65
24. Improved Touring J Specifications 66
Production Categories 67
Production Category 67
1. GCR 67
1. Purpose 67
2. Intent 67

3. Specifications 67
4. Authorized Modifications 67
5. Car Classification 74
6. E Production Specifications 75
7. F Production Specifications 77
8. G Production Specifications 78
9. H Production Specifications 79
10. SP Production Specifications 79

GT Categories 80

GT Category 80
1. GCR 80
2. Purpose: 80
3. Intent: 80
4. Specifications 80
5. Authorized Modifications (GT-1) 80
6. Approved Automobiles/Notes 87
7. GT-2, 3, 4, 5 Preparation Rules 90

GT-4 (Allison Legacy Cars) 114
1. GCR 114
2. Purpose 114
3. Intent 114
4. Chassis 114
5. Brakes 114
6. Steering 115
7. Engine 115
8. Fuel System 115
9. Wheels & Tires 116
10. Car Weight 116
11. Car Bodies 116
12. Equipment and General Accessories 116

GT-5 (Legend Cars) 118
1. GCR 118
2. Purpose 118
3. Intent 118
4. Safety Requirements 118
5. Preparation Rules/Modifications 118

GT-5 (Baby Grand Cars) 118
1. GCR 118
2. Purpose 118
3. Intent 118
4. Safety Requirements 118
5. Preparation Rules/Modifications 118

GTSC (GT - Stock Car) 119
1. GCR 119

2. Purpose 119
3. Intent 119
4. Safety Requirements 119
5. Preparation Rules/Modifications 119
GTP 119
1. General 119
Formula Categories 120
Formula A and C 120
1. General 120
Formula A 120
1. Displacement 120
2. Engine General 120
3. Engines Per Schedule A 120
4. Engines Per Schedule B 121
5. Transmission 121
6. Minimum Weight 121
7. Fuel Tank Capacity 122
8. Formula Enterprises 122
Formula C 122
1. Engines – Displacement 122
2. Minimum Weight 122
3. Fuel Tank Capacity 122
Formula 2000 123
1. Definition 123
Formula Ford 129
1. Definition 129
2. Engine 129
3. Exhaust Outlets 134
4. Transmission 134
5. Final Drive 134
6. Clutch 134
7. Chassis/Frame 134
8. Suspension and Running Gear 134
9. Body 134
10. Brakes 135
11. Wheels 135
12. Minimum Weight 135
Club Formula Ford 136
1. GCR 136
2. Club Formula Ford Committee 136
3. Suspension 136
4. Other Allowed Fords 136
5. Tires 136
6. Tire Declaration 136

7. Minimum Weight 136
8. Class Identification 136
9. Protests 136
Formula Vee 137
1. Definition: 137
2. Weight and Dimensions 137
3. Suspension 137
4. Brakes 137
5. Engine 138
6. Engine/Transmission Mount 138
7. Transmission – Rear Axle 140
8. Ballasting 140
9. Frame 140
10. Body 141
11. Non-Standard Parts 141
12. Battery 141
13. Front View 141
Formula Super V (Air Cooled) 142
1. Definition 142
Formula 5 (F5, formerly F500/F440) 144
1. Definition 144
2. Weight and Dimensions 144
3. Suspension 144
4. Brakes 144
5. Steering 144
6. Transmission and Final Drive 144
7. Frame/Chassis 144
8. Roll Cage 145
9. Bodywork 145
10. Tires 145
11. Wheels 145
12. Ballast 145
13. Fuel Tank 145
14. Fire Extinguisher 145
15. Engines 145
16. Chain/Belt Guards 146
17. Radiator 146
18. Fuel 147
19. Safety Items 147
20. Car Specification Tables 147
Formula Indy 148
1. GCR 148
2. Engine Specifications 148
3. Mechanical & General Specifications Pro & Pro-Am 148

Sports-Racing Categories 151

ASR, CSR, DSR 151

1. Purpose 151
2. Classification 151
3. Self Starter 151
4. Brakes 151
5. Coachwork 151
6. Wheels and Tires 152
7. Safety Equipment 152

Sports 2000 153

1. Definition 153
2. Safety Requirements 153
3. Chassis 153
4. Bodywork Including Airfoils 153
5. Engine 153
6. Suspension 155
7. Brakes 155
8. Shock Absorbers 155
9. Steering 155
10. Wheels and Tires 155
11. Transmission 155
12. Fuel Cells 155
13. Fuel Capacity 155
14. Electrical 155
15. Weight 156
16. Windscreens 156
17. Bulkheads and Cells 156

Club Sports 2000 157

1. Purpose 157
2. Definition 157
3. Safety Requirements 157
4. Requirements 157
5. Suspension 157
6. Shock Absorbers 157
7. Markings 157
8. Eligible Chassis 157

Sports Renault 158

1. Definition 158
2. Safety Requirements 158
3. Maintenance and Repairs 158
4. Chassis 158
5. Bodywork 158
6. Engine and Drive train 159
7. Suspension 159

8. Brakes 159
9. Shock Absorbers and Springs 159
10. Steering 159
11. Wheels 159
12. Fuel System 160
13. Electrical System 160
14. Weight 160
15. Battery 160
16. Vehicle Configuration 160
17. Updates 160
18. Sports Renault Drivetrain Protests 160
19. Accessory Items 160
20. Mandatory Items 161
Sports Renault Specifications 162
21. General 162
22. Chassis 162
23. Engines 162
24. Carburetor 162
25. Transmission 163
26. Bodywork 163
Spec Racer Ford 164
1. Definition 164
Club Spec Racer Ford 165
1. Definition 165
2. Safety Requirements 165
3. Maintenance and Repairs 165
4. Chassis 165
5. Bodywork 165
6. Engine and Drivetrain 166
7. Suspension 166
8. Brakes 166
9. Shock Absorbers and Springs 166
10. Steering 166
11. Wheels 166
12. Fuel System 167
13. Weight 167
14. Battery 167
15. Accessory Items 167
16. Mandatory Items 168
17. Chassis 168
18. Engines 169
19. Transmission 169
20. Bodywork 169
Other Categories 170

American Grand Sport (AGS) 170
1. Introduction and Definition 170
2. Safety 170
3. Specification and Modification Limits 170
Street Tuner Category 175
1. GCR 175
2. Purpose 175
3. Eligibility 175
4. Authorized Modifications 175
5. Classes 175
6. Wheels/Tires 175
7. Safety 175
8. Chassis 175
9. Brakes 176
10. Transmission/Final Drive 176
11. Bodywork 176
12. Engine 176
13. Interior 176
14. Weights 176
Unrestricted Category 177
1. Classification 177
2. Fuel 177
3. Requirements 177
4. Designation 177
5. Championship Points 177
Vintage/Historic 178
Vintage/Historic Racing 178
1. Background 178
2. Introduction 178
3. Rules of the Road 178
4. Safety 178
5. General Regulations 178
6. Tires 179
7. Licenses 179
8. Points: 179
High Speed Autocross (HSAX) 181
The Midwestern Council HSAX Story 181
High Speed Autocross (HSAX) General Conditions and Rules: 182
1. General Regulations 182
2. Event Insurance 182
3. Eligibility of Participants 182
4. Instructor Certification 183
5. Technical Inspection 183
6. Identification Marks 183

7. Safety Equipment....184
8. Fuels....185
9. Course Rules, Scoring, Trophies, Series Championship....185
10. Protests....185
11. Class/Category of Entry....186
HSAX Points Based Competition Rules....187
1. Class/Category....187
2. Tires....187
3. Suspension Bushings and Shock Absorbers....187
4. Brakes....187
5. Updating and Backdating....187
6. Point Assessment Schedule....188
HSAX Street Tire Class Competition Rules....189
1. General....189
2. Street Restricted....189
3. Street Modified Category....190
4. Super Street Category....190
5. Street AWD class....190
6. Street Unlimited Category....191
HSAX Race Class Competition Rules....192
1. Race Class....192
High Speed Autocross Classification List....193
1. Class Z (ZS, ZP, ZM)....193
2. Class Y (YS, YP, YM)....194
3. Class X (XS, XP, XM)....195
4. Class A (AS, AP, AM)....197
5. Class B (BS, BP, BM)....199
6. Class C (CS, CP, CM)....201
7. Class D (DS, DP, DM)....204
8. Class E (ES, EP, EM)....208
HPDE/Track Day....213
HPDE/Track Day Rules....213
1. HPDE/Track Day Description....213
2. General Regulations....213
3. Event Insurance....213
4. Driver Groups....213
MCSCC Championship Enduro Series Regulations....214
1. Enduro Definition....214
2. Enduro General Regulations....214
3. Identification....214
4. Radios....214
5. Transponders....214
6. Pit Assignments....215
7. Entering the Paddock....215

8. Trophies 215
9. Protests 215
10. Tech/Impound 215
11. On-Course Refueling 215
12. On-Course Disabled Vehicles 215
13. Body Damage-Repairs-Engine Changes 215
14. Sound Control 215
15. Waiving Yellow "All" (Full Course Yellow) 215
16. Red Flag 215
17. Penalty for Passing Under Yellow 216
18. Pit Rules 216
19. Pit Lane Refueling Requirements 216
20. Pit Stop Times 216
21. Repair 217
22. Pit Signals 217
23. Equipment Staging 217
24. Clean Up 217

Appendices 218

Appendix X: Safety Fuel Tanks 218
1. Capacity 218
2. Location 218
3. Installation, Fittings, Lines 218
4. Recommended Safety Fuel Cell Specifications 218

Appendix Z: Roll Bar Requirements 219
1. Basic Design Considerations 219
2. Material 219
3. Fabrication 219
4. Bracing 219
5. Mounting Plates 220
6. Removable Roll Bars 220
7. Installation on Cars of Space Frame and Frameless Design 220
8. Roll Cages 220

Appendix ZZ: Roll Cage Recommendations 222
1. Basic Design Considerations 222
2. Material 222
3. General Construction 222
4. Formula and Sports Racing Cars 222
5. Open Production Cars 223
6. Closed Cars 223
7. Removable Roll Cages 224
8. Installation on Cars of Space frame and Frameless Design 224
9. Other Roll Cage Designs 224
10. Driver’s Seat 224

The Midwestern Council Story

Roaring down a curvy road, wheel to wheel, you blast down long straights, then hard on the brakes, hook into the turns…just you, your car and the competition. That's what road racing is like! The Midwestern Council of Sports Car Clubs has found a niche for itself as well as a national reputation for its highly competitive programs and members.

Originally run on private estates and closed-off public roads in the 40's and early 50's, amateur road racing has moved to closed circuit tracks. In 1958, a number of racing clubs found that rising insurance and track rental costs were making individual club racing programs prohibitively expensive. They joined together to form the Midwestern Council of Sports Car Clubs to set competition and licensing procedures and to coordinate race dates in order to facilitate the participation by the drivers of all member clubs. Today, although the club count has risen to 8 with over 800 member spread throughout the Midwest, the structure of the Council is still basically one of autonomous individual clubs joined together in motor sports programs.

Acting as a regulating and coordinating body, the Council sanctions between 10 and 14 events annually, most sponsored by individual clubs. The Council itself runs three Driver School sessions each year where new drivers are trained, tested and observed in on-track situations before qualifying for Novice Competition Licenses. The Council issues three levels of licenses: Temporary Permit (for Driver School), Novice License (upon satisfactory completion of Driver School) and Full Competition License. Full Competition License holders can also seek to qualify for Instructor Certification to teach at Driver Schools.

All cars participating in events sanctioned by the Midwestern Council must meet strict regulations for safety and race worthiness. Divers are also required to wear a helmet, suit, shoes and gloves, which meet strict regulations for safety and fire protection. These safety requirements, thorough pre-race tech inspections, extensive track side safety equipment; combined with the Council's Driver School program, produce one of the finest safety records in motor sports today.

In more recent years, the Midwestern Council has adopted two new venues for motor sports enthusiasts. The first of these two forms of competition is high speed autocrossing. Autocross enables those who don't want door-to-door competition a place to test their driving skills without having to go through the expense and time dedication road racing requires. Competitors use their own street cars and compete on a race course against the clock. Four different groups divide the level of preparation of the cars in the Autocross group from stock to race prepared cars. If you wish the thrill and excitement of racing but cannot afford the commitment to door of door racing, High Speed Autocrossing (HSAX) has what you are looking for.

HPDE (High Performance Drivers Education) lapping days let you get your street or race car on the track and stretch the legs, with over two hours of track time throughout the day in rotating groups.

Vintage/Historic racing has become very popular in the United States and Midwestern Council has a program for the person looking to have fun in a vintage/historic car. Vintage racing allows its participants to race their vintage automobiles without the competition of door to door racing.

Midwestern Council is governed by a Board composed of two delegates from each member club. Monthly Board meetings are held to conduct organizational business and competition regulations; the minutes are published in the Council's Klaxon newsletter which is available online at www.mcscc.org.

The Midwestern Council of Sports Car Clubs is registered as a not-for-profit corporation in the State of Illinois.

Bylaws

MIDWESTERN COUNCIL OF SPORTS CAR CLUBS

We, the Directors of the MIDWESTERN COUNCIL OF SPORTS CAR CLUBS, adopt the following Constitution and Bylaws on this 14th day of October, 1993.

ARTICLE I
Name

The name of this organization shall be “Midwestern Council of Sports Car Clubs,” hereinafter referred to as “MC.”

ARTICLE II
Organization

This organization shall be an association of clubs which are in sympathy with the objectives of MC. It shall be organized in accordance with the GENERAL NOT FOR PROFIT CORPORATION ACT OF THE STATE OF ILLINOIS. MC shall have such powers as are now, or hereafter may be, granted by the Act.

ARTICLE III
Registered Office and Registered Agent

MC shall have and continuously maintain a registered office and registered agent whose office is identical with such registered office as the Board of Directors may determine from time to time.

ARTICLE IV
Object

The object of MC is as follows: to provide for its members sports activities, to provide an effective governing body, rules, regulations and licensing procedures, to enforce said rules, to act as a source of technical information, to promote cooperation between the member clubs, and to provide said activities at reasonable cost to its members.

ARTICLE V
Structure

MC is a voluntary association of incorporated clubs (hereinafter referred to as Clubs), each of which shall retain its own name and complete autonomy, except that each club specifically waives and concedes to MC complete, final and supreme jurisdiction concerning the governing of MC sanctioned events, interclub events and competitions. The MC program is expected to be a major focus of the individual Club’s activities and member clubs are expected to maintain an active presence in MC.

ARTICLE VI
Membership

Section 1 – Eligibility

Any duly constituted automobile club, in sympathy with the aims and objectives of MC that is incorporated as a limited liability corporation in any continental state, is eligible for membership in MC.

Section 2 – Club Affiliation

There are two classes of club affiliation in MC

Member Club

A Member Club is one in which all regular members are assessed the MC affiliation fee. Such clubs shall enjoy all the privileges granted to clubs by MC: the clubs may organize MC-sanctioned events, the clubs may participate in and vote in MC Board of Directors’ meetings, and club members may hold MC elective and appointed offices.

Associate Club

An associate club is one in which only a portion of the regular members are assessed the MC affiliation fee. This portion shall not be less than one-quarter (1/4) of that club’s membership, and must include the offices President, Vice President, Secretary, Treasurer and Club Steward. Associate clubs shall not be granted MC event sanctions; they may participate in MC Board of Directors’ deliberations, but may not vote on motions nor can their members hold elected MC offices. Only members who have paid the affiliation fee may be granted MC competition licenses.

Section 3 – Individual Membership

Regular Members

A person listed as a full member of one of the Member clubs shall be declared a Regular Member upon payment of the annual affiliation fee.

Family Members

Any person listed as a Family Member of one of the Member Clubs shall be declared a Family Member upon payment of annual family dues. Family Members shall not receive any MC-sanctioned events points; they shall not receive all publications provided to Regular Members; and they shall not be eligible for MC competition licenses.

Dual Members

Any person shall be eligible for dual membership, provided such person is a Regular Member of one of the Member Clubs (hereinafter referred to as a "Club of Record", and the Club of Record has paid the Regular Membership affiliation fee to MC. There shall be no annual affiliation paid to MC for a person joining the Associate of second Member Club. A person not listed as a Dual Member of one of the Associate or Member Clubs shall not be counted as a Regular Member.
Note: See Article XVI for definition of affiliation fees and dues.

Non Discriminatory Policy

Midwestern Council of Sports Car Clubs admits members of any race, color, national and ethnic origin, sexual orientation, gender identity to all the rights, privileges, program, and activities generally accorded or made available to members. It does not discriminate on the basis of race, color, national and ethnic origin, sexual orientation, or gender identity in participation of the activities of Midwestern Council of Sports Car Clubs.

Section 4 – Admission, Resignation, Expulsion, Probation, Suspension, Conduct

Admission

Any club wishing to join MC may do so by petitioning the Board of Directors. The request shall include a formal letter of request signed by the President, Vice President and Secretary (or equivalent officers), a copy of the club constitution and bylaws, and a copy of the Certificate of Incorporation. The letter shall indicate which class of club affiliation is desired. Upon receiving a simple majority vote in favor by the Board of Directors and payment of the first yearly affiliation fee, the club shall become a member of MC.

Resignation

Any club may resign at any time by notifying the Secretary of MC. Such resignation shall be effective upon receipt, provided all indebtedness to MC has been paid,

Expulsion

The Board of Directors may expel from membership of MC any club which the Board, in its sole discretion, shall consider unfit to remain a member thereof. A club so expelled shall forfeit all privileges of membership and all rights against MC and shall not be entitled to a refund of any current fees or any part thereof,

Probation

The Board of Directors may put an MC club on probation, in its sole discretion, for violation of Article VI Section 4 "Conduct" or Article XVII in part or in its entirety. A club on probation will lose all of its rights and privileges which include the rights and privileges as a club but its individual members will still retain membership status in Midwestern Council. Revocation of probation will be at the sole discretion of the Board of Directors.

Suspension

Any club not having paid affiliation fees prior to the delinquency date set from time to time by the Board of Directors shall be suspended, with attendant loss of rights and privileges to that club and its members. Reinstatement shall occur upon receipt by the MC Treasurer of the subject fees.

Conduct

It shall be the duty of every MC member to conduct him/herself, while representing MC, in a manner that shall not be prejudicial to the interests of MC or bring unnecessary criticism of MC.

ARTICLE VII
Board of Directors

Section 1 – General Powers

The affairs of MC shall be managed by its Board of Directors.

Section 2 – Number, Tenure and Qualifications

Each clubs governing authority shall, from its membership, send a delegate(s) to each meeting of the MC Board of Directions. Club delegate(s) shall be members of the club he/she is representing, shall be regular members of MC set forth in Article VI, Section 3, and one of the delegates shall be the Club Steward or his/her appointed representative. The delegate(s) become *de facto* MC Directors. They shall serve as MC Directors at the pleasure and convenience of the club they represent.

Section 4 – Manner of Acting

The act of a majority of Directors present at a meeting at which a quorum is preset shall be the act of the MC Directors except where otherwise provided by law or by these Bylaws.

Section 5 – Compensation

Officers shall receive no wage remuneration or other compensation. Expenses incurred at the direction of the Board of Directors and for the benefit of MC shall be reimbursed.

ARTICLE VIII

Meetings of Directors

Section 1 – Annual Meeting

An Annual Meeting of the Board of Directors shall be held during December of each year for the purpose of electing officers, receiving a report from the officers of MC on their activities during the preceding year and for the transaction of such other business as may come before the meeting. The Annual Meeting may be held in conjunction with a regular monthly business meeting.

Section 2 – Special Meetings

Special meetings may be called by the President, Competition Director or Executive Board, or may be called upon written request of one-half (1/2) of the Member Clubs. Notice of such meetings shall be in accordance with Section 4.

Section 3 – Regular Meetings

Regular meetings of the Board of Directors shall be held monthly at a time and place to be determined from time to time by the Board of Directors with no notice other than provided for by these Bylaws.

Section 4 – Notice of Meeting

If mailed, the notice of a meeting shall be deemed delivered when deposited in the United States mail addressed to the member at the address as it appears in the records of MC with postage thereon prepaid. The purpose of the meeting shall be stated in the call. Except in cases of emergency, at least three (3) days written notice shall be given,

Section 5 – Informal Action by Directors

Any action required to be, or which may be, taken at a meeting of the Board of Directors may be taken without a meeting if (1) consistent in writing, setting forth the action to be taken, has been signed by, or (2) consent is given verbally via telephone conference by a two-thirds (2/3) majority of Directors entitled to vote with respect to the subject matter thereof. A record of such actions and the consent shall be kept and forwarded to the MC Secretary by the time of the next regular meeting of the MC Board of Directors.

Section 6 – Voting

Each Member Club shall be entitled to one vote per Director, up to a maximum of two (2) votes per club. The Club Steward or his/her appointed representative shall cast one of the two votes. Voting on all matters, except election officers, shall be by show voice vote of by roll call (i.e. Club vote), if requested by any Director. All Directors in good standings may vote on any matter coming before the meeting.

Section 7 – Quorum

For all meetings of the Board of Directors, a quorum shall consist of representation of three-fifths (3/5) of the Member Clubs and a simple majority of voting Directors. In the absence of a quorum, a simple majority of the voting Directors present may vote to adjourn the meeting.

Section 8 – Rules

All meetings of the Board of Directors shall be conducted in accordance with the provisions of the enabling law, these Bylaws and the current edition of Robert's Rules of Order,

ARTICLE IX
Elections

Section 1 – Elections

Each year, the Board of Directors shall elect, from its membership, the following officers: President, Vice President, Competition Director, Treasurer and Secretary. The procedure shall be:

Nomination

Directors seeking office shall have their names placed in nomination at the regular November monthly meeting. These nominations shall be published in the MC Newsletter. Additional candidates may be placed in nomination up to the time ballots are distributed.

Voting

Voting shall be by written, secret ballot. Each eligible director shall be handed a blank piece of paper on which the candidates name is to be written.

Counting of Ballots

The completed ballots shall be collected and counted by a team of three Directors not seeking office.

ARTICLE X
Officers and Their Duties

Section 1 – Removal

Any officer of agent elected or appointed by the Board of Directors may be removed by the Board of Directors whenever in its judgment the best interests of MC would be served thereby, but such removal shall be without prejudice to the contract rights, if any, of the person so removed.

Section 2 – Vacancies

Any vacancy in any office because of death, resignation, removal, disqualification or otherwise, may be filled by the Board of Directors for the unexpired portion of the term,

Section 3 – President

The President shall be the principal executive officer of MC and shall, in general, supervise and control all business of MC. He/she may sign, with the secretary of any other proper officer of MC authorized by the Board of Directors, any deeds, mortgages, bonds, contracts, or other instruments which the Board of Directors has authorized to be executed, except in cases where the signing and execution thereof shall be expressly delegated by the Board of Directors or by the Bylaws or by statute to some other officer or agent of MC; and, in general, shall perform all duties incident to the office of President and such other duties as may be prescribed by the Board of Directors from time to time. The President is, by fact of office, a member of all committees. The President shall be elected from among the Board members.

Section 4 – Vice President

In the absence of the President or in the event of his/her inability or refusal to act, the Vice President (or in the event there be more than one Vice President, the Vice Presidents, in the order designated or, in the absence of any designation, then in the order of their election) shall perform the duties of the President and, when so acting, shall have all the powers of, and be subject to, all the restrictions of the President. Any Vice President shall perform such other duties as from time to time may be assigned to him/her by the President of by the Board of Directors.

Section 5 – Competition Director

The Competition Director shall be responsible for the supervision and management of the technical and administration of motor sports competitive activities. He/she shall be responsible for compilation of the rules and regulations governing motor sports competition. He/she shall be responsible for the selection, competence and training of such assistant directors and/or stewards and he/she may appoint. It shall be his/her responsibility to ensure that all arrangements for any MC-sanctioned event are in compliance with the contractual requirements and the competition rules and regulations of MC. The Competition Director shall preside over that portion of meetings of the MC Board of Directors concerned specifically with motor sports competition, referred to as the Contest Board. The Competition Director is, by fact of office, a member of all committees.

Section 6 – Treasurer

If required by the Board of Directors, the Treasurer shall give a bond for the faithful discharge of his/her duties in such sum and with such surety or sureties as the Board of Directors shall determine. The Treasurer shall have charges, custody of and be responsible for all funds and securities of MC; receive and give receipts for monies in the name of MC in such banks, trust companies or other depositories as shall be selected in accordance with the provisions of Article XIII of these Bylaws; and, in general, perform all the duties incident to the Office of Treasurer and such other duties as from time to time may be assigned by the President or Board of Directors. The Treasurer shall report on the status of the clubs' membership quarterly.

Section 7 – Secretary

The Secretary shall record the minutes of the Board of Directors' meetings in one or more books provided for that purpose. He/she shall ensure that all notices are duly give in accordance with the provisions of these Bylaws or as required by law. He/she shall be custodian of the records and seal of MC and see that the seal of MC is affixed to all documents, the execution of which, on behalf of MC under its seal, is duly authorized in accordance with the provisions of these Bylaws. He/she shall in general, perform all duties incident to the Office of Secretary and such other duties as from time to time may be assigned by the President or Board of Directors

Section 8 – Appointed Offices

MC officers may, from time to time, appoint persons to certain offices. The names, competence and qualifications of all such candidates shall be submitted to the Board of Directors for review and approval.

ARTICLE XI
The Executive Committee

Section 1 – Numbers

The officers of the Board of Directors and the Competition Director shall constitute the Executive Committee. The Executive Committee shall have general supervision of the affairs of MC between regular meetings, fix the hour and place of meetings, make recommendations to the Board of Directors and shall perform such other duties as may be determined from time to time by the Board of Directors. The Executive Committee shall be subject to the orders of the Board of Directors and none of its acts shall conflict with action taken by the Board of Directors.

ARTICLE XII
Committees

Section 1 – Committees of Directors

The Board of Directors may, by resolution adopted by a majority of the Directors in office, designate one or more committees. Each Committee shall consist of two or more Directors and, to the extent provided in said resolution, shall have and exercise the authority of the Board of Directors in the management of MC. The designation of such Committees and the delegation thereto of authority shall not relieve the Board of Directors, or any individual director, of

any responsibility imposed upon it or him/her by law. Such Committees shall be subject to the orders of the Board of Directors and none of the acts of such Committees shall conflict with action taken by the Board of Directors.

Section 2 – Other Committees

Other Committees not having and exercising the authority of the Board of Directors in the management of MC may be designated by a resolution adopted by a majority of the Directors present at a meeting at which a quorum is present. Except as otherwise provided in such resolution, members of each such Committee shall be members of MC, and the President of MC shall appoint the members thereof. Any member thereof may be removed by the person or persons authorized to appoint such member whenever, in their judgment, the best interests of MC shall be served by such removal. Such Committees shall be subject to the orders of the Board of Directors and none of the acts of such Committees shall conflict with action taken by the Board of Directors.

Section 3 – Term of Office

Each member of a Committee shall continue as such until the next Annual Meeting of the Board of Directors of MC and until his successor is appointed, unless the Committee shall be sooner terminated or unless such member is removed from such Committee, or unless such member shall cease to qualify as a member thereof.

Section 4 – Chairman

One member of each Committee shall be appointed Chairman.

Section 5 – Vacancies

Vacancies in the membership of any Committee may be filled by appointments made in the same manner as provided in the case of the original appointments.

Section 6- Quorum

Unless otherwise provided in the resolution of the Board of Directors designating a Committee, a majority of the whole Committee shall constitute a quorum and the act of a majority of the members present at any meeting in which a quorum is present shall be the act of the Committee.

Section 7 – Rules

Each Committee may adopt rules for its own government not inconsistent with these Bylaws or with rules adopted by the Board of Directors.

ARTICLE XIII
Contracts, Sanctions, Checks, Deposits and Funds

Section 1 – Contracts

The Board of Directors may authorize any Officers or Officers, agent or agents of MC in addition to the Officers so authorized by these Bylaws, to enter into any contract or execute and deliver any instrument in the name of, and on behalf of, MC. Such authority may be general or confined to specific instances. Any contract entered into or extraordinary purchase made in the name of MC without prior approval of the Board of Directors shall be the sole responsibility of that individual.

Section 2 – Sanctions

Any motor sport event carried on the MC calendar of events, organized in accordance with MC Rules and Regulations, for which the appropriate sanction fee shall have been paid to MC, shall be considered to be an MC-sanctioned event. Payment of such sanction fee does not constitute a contract between the club and MC, nor does it imposed upon MC any financial obligation, responsibility or liability of the club.

Section 3 – Checks, Drafts, etc.

All checks, drafts or other orders for the payment of monies, notes or other evidences of indebtedness issued in the name of MC shall be signed by such Officer or Officers, agent or agents of MC, and in such a manner as shall, from time to time, be determined by resolution of the Board of Directors.

Section 4 – Deposits

All funds of MC shall be deposited from time to time to the credit of MC in such banks, trust companies or other depositories as the Board of Directors may select.

ARTICLE XIV
Books and Records

MC shall keep accurate and complete books and records of all accounts, and shall also keep minutes of the proceedings of the Board of Directors and Committees having any of the authority of the Board of Directors. MC shall keep at the registered office or principal office a record of giving the names and addresses of the member clubs. All books and records of MC may be inspected by any member of a member club or his/her agent or attorney for any proper purpose at any reasonable time.

ARTICLE XV
Publications

MC shall sponsor a monthly bulletin or newsletter, to be supported by MC funds, for the purposes of reporting to the membership the results, and enactments of its meetings, competitions and other information as may be beneficial to the membership. MC may also, from time to time, publish rule books or other publications as may be deemed useful to the running of its motor sports competitions.

ARTICLE XVI
Fiscal Year

The Fiscal Year of MC shall begin the first day of January and end on the last day of December of each year.

ARTICLE XVII
Fees

Section 1 – Affiliation Fees

The Board of Directors shall determine, from time to time, the amount of the annual affiliation fees payable to MC by member clubs. Affiliation fees are payable annually.

Section 2 – Other Fees

The amount of fees for various MC functions and regulatory activities shall be determined, from time to time, by the Board of Directors.

Section 3 – Definition of Fees and Dues

For the purpose of this document, the word fees will be reserved for monies payable to MC, and the word dues will be reserved for monies payable to the clubs by individuals.

ARTICLE XVIII
Seal

The Board of Directors shall provide a corporate seal which shall be in the form of a circle and shall have inscribed thereon the words “Corporate Seal, Illinois” and “Midwestern Council of Sports Car Clubs.”

ARTICLE XIX
Waiver of Notice

Whenever any notice whatever is required to be given under the provisions of the General Not for Profit Corporation Act of Illinois, or under the provisions of the Articles of Incorporation of Bylaws of MC, a waiver thereof in writing, signed by the person or persons entitled to such notice, whether before or after the time stated therein, shall be deemed equivalent to the giving of such notice.

ARTICLE XX
Indemnification of Directors and Officers

Action, Etc., Other than by MC. MC shall indemnify any person who was or is a party or is threatened to be made a party to any threatened, pending or completed action, suit or proceeding, whether civil, criminal, administrative or investigative (other than an action by or in the right of MC) by reason of the fact that he/she is or was a director or officer of MC against expenses (including attorneys’ fees), judgments, fines, and amounts paid in settlement actually and reasonably incurred by him/her in connection with such action, suit or proceeding, if he/she acted in good faith and in a manner he/she reasonably believed to be in or not opposed to the best interests of MC, and, with respect to any criminal action or proceeding, had no reasonable cause to believe his/her conduct was unlawful or had reasonable cause to believe his conduct was lawful. The termination of any action, suit, or proceeding by judgment, order, settlement, conviction, or upon a plea of nolo contendere or its equivalent, shall not, of itself, create a presumption that the person did not act in good faith and in a manner which he/she reasonably believed to be in or not opposed to the best interests of MC, and, with respect to any criminal action or proceeding, had reasonable cause to believe that his/her conduct was unlawful or had no reasonable cause to believe his/her conduct was lawful.

ARTICLE XXI
Personal Liability

All persons or corporations extending credit to, contracting with, or having any claim against the corporation or the Board of Directors, shall look only to the funds and property of the corporation for payment of any such contract or claim or for the payment of any debt, damage, judgment or decree, or any other money that may otherwise become due or payable to them from the corporation of the Officers or Directors, so that neither the members of the corporation nor the Officers of Directors, present or future, shall be personally liable therefore.

ARTICLE XXII
Amendments to Bylaws

These Bylaws, except Article V, Article VI-Section 2, Article XV and Article XXII, may be altered, amended or repealed, and new Bylaws adopted by a two-thirds (2/3) majority of the Directors present at any regular or special meeting,

provided that the amendment has been submitted in writing at the prior Regular Meeting of the Board of Directors, and published in the MC newsletter.
Article V, Article VI-Section 2, Article XV and Article XXII, may be altered, amended or repealed, and new Bylaws adopted by a three-fourths (3/4) majority of the Directors present at any regular or special meeting, provided that the amendment has been submitted in writing at the prior Regular Meeting of the Board of Directors, and published in the MC newsletter.

General Regulations

Race Staff Personnel

1 Officials and Their Duties

1.1 Officials

The staff of officials, whose duty it shall be to direct and control the event may include:

1.1.1 Chief Steward of the Event
1.1.2 Stewards of the Meet
1.1.3 Race Chairman
1.1.4 Chief of Flagging & Communications
1.1.5 Chief of Timing & Scoring
1.1.6 Chief of Technical Inspection & Impound
1.1.7 Chief of Safety & Rescue
1.1.8 Chief of Pit & Grid
1.1.9 Chief Starter
1.1.10 Registrar
1.1.11 Assistant Chief Steward
1.1.12 Operating Stewards
1.1.13 Pit Lane Stewards
1.1.14 Chief Course Marshall
1.1.15 Chief Paddock Marshall
1.1.16 Chief Registrar

They shall be termed “Officials” and may, with the exception of the Stewards of the Meet, have assistants also termed “Officials,” to whom any of their duties may be delegated.

1.2 Required Officials

At every MCSCC Sanctioned event there shall be:

1.2.1 A Chief Steward of the Event.
1.2.2 A Chief of Safety and Rescue.
1.2.3 Other officials as necessary.

1.3 Conduct

The Race Chairman, Chief Steward, Assistant Chief Steward, Chief Starter, Chief of Timing and Scoring, Chief of Technical Inspection and Impound and the Stewards of the Meet shall have no conflict of interest arising from direct involvement or connection with the organizers or sponsors of an event or any entrant or driver taking part. Membership or holding office in MCSCC or a MCSCC club shall not be deemed a conflict of interest in the absence of other evidence of conflict of interest,

1.4 Standards of Behavior

Every official shall exhibit the highest standards of behavior.

1.5 Alcohol, Narcotics and Dangerous Drugs

1.5.1 Consumption of alcoholic beverages by any official is expressly prohibited until all on-track activities are over for the day, and thereafter until the individual official’s duties have been completed for the day. Any official who has consumed any alcoholic beverages on the day of the event contrary to the above shall not participate, and may be excluded by the Chief Steward or the Chief of the offender’s specialty.

1.5.2 The use of any narcotic or Dangerous Drug, as deemed by State and Federal laws, by any official is expressly prohibited.

1.6 Stewards of the Meet (SOM)

The SOM shall be responsible to the Chief Steward of the Event. They shall act primarily in a judicial capacity, and therefore shall not incur any responsibility for the organization or execution of an event.

1.6.1 Powers of the SOM

1.6.1.1 To judge any protest received from the Chief Steward of the Event.
1.6.1.2 To review any penalty imposed by the Chief Steward of the Event at the affected competitor’s request

1.6.2 Composition of the SOMs

1.6.2.1 Each panel shall be composed of three (3) individuals appointed by the Event Chief Steward who:

1.6.2.1.1 Holds an MCSCC Full Competition License or above; or
1.6.2.1.2 Is a club Steward: or
1.6.2.1.3 Is a licensed MCSCC Steward who is not functioning as a Steward for the event.

1.6.2.2 The Chief Steward of the event may appoint separate panels for each protest or review.

1.7 Chief Steward

The Chief Steward of the event is the executive responsible for the general conduct of the event in accordance with the GCR and the Supplementary Regulations. Chief Stewards MUST hold a valid Chief Stewards License *approved by the Competition Director.*

1.7.1 **Execution of the Event**: The Chief Steward shall:

1.7.1.1 Execute the program of competitions and other activities safely by controlling drivers, their cars, the officials and workers from the commencement of activities until the time for protests from the last competition has expired.

1.7.1.2 Ascertain whether officials are at their posts

1.7.1.3 Ensure that all officials and workers are provided with necessary information

1.7.1.4 Collect all reports and other official information for the determination of results and for his/her event report.

1.7.1.5 Authorize a change of driver or car.

1.7.1.6 Prevent an ineligible driver from competing.

1.7.1.7 Draft the Supplementary Regulations.

1.7.2 Maintenance of Order: The Chief Steward may:

1.7.2.1 Keep order in conjunction with the authorities, policies and those who are responsible for public safety.

1.7.2.2 Exclude from the event any entrant, driver, crew, official, worker, or guest who is found to be guilty of misbehavior.

1.7.2.3 Exclude from participation an official or worker who is ineligible for the position to which he/she is assigned or who the Chief Steward determines in incapable of carrying out his/her duties.

1.7.2.4 Order the removal from the premises any person who refuses to obey the order of any responsible official or public safety officer.

1.7.2.5 Prohibit from competition any driver or car considered dangerous.

1.7.2.6 Convey to the MCSCC Competition Director a report dealing with the misbehavior of any entrant or driver.

1.7.3 Powers of the Chief Steward: The Chief Steward may:

1.7.3.1 Exclude an ineligible driver or car.

1.7.3.2 Remove technical inspection stickers.

1.7.3.3 Disallow qualifying times.

1.7.3.4 Direct cars to be impounded at any time during the event.

1.7.3.5 At his/her discretion and without necessarily receiving a request to do so, order disassembly and inspection of any entered car to ascertain its conformance with the GCR.

1.7.3.6 Receive protests from the entrants or drivers immediately transmit them to the SOM.

1.7.3.7 Impose any penalty provided for in the GCR or Supplementary Regulations.

1.8 Assistant Chief Steward

Assistant Chief Steward of the event is the executive responsible for the duties assigned to him/her by the Chief Steward, which may include total responsibility for certain groups and/or special groups of the event (e.g. Vintage Groups).

1.9 Operating Steward

The Operating Stewards are the executives responsible for the conduct of the on-track activities and maintaining compliance with the GCR and Supplementary Regulations regarding on-track activities. These duties shall be assigned by the Chief Steward of the Assistant Chief Steward of the Event.

1.10 Back-Up Steward

The Back-up Steward shall record all communications pertaining to on-track activities for the Chief Stewards report.

1.11 Pit Lane Steward

The Pit Lane Steward shall inform drivers that have received a black flag of the infraction, inspect a car that has received a mechanical black and inform the Pit Marshals of any pit lane infraction.

1.12 Race Chairman

The Race Chairman shall be responsible for the organization of an event. Specifically, he or she shall:

1.12.1 Determine with promoters, organizers and the Chief Steward the schedule, all other activities to occurs during the event and see that all Entry Forms are printed and mailed.

1.12.2 Arrange that the insurance conforming to MCSCC requirements is procured, and that a copy of the insurance certificate is presented to the Chief Steward prior to the commencement of the event.

1.12.3 See that qualified officials and workers are appointed and that they are on station.

1.12.4 Arrange for the use of the course and all necessary facilities.

1.12.5 Arrange for emergency vehicles and equipment.

1.12.6 Arrange for trophies and the proper distribution thereof.

1.12.7 Arrange for proper receipt and acknowledgment of entries.

1.12.8 Arrange for proper registration of all entries.

1.12.9 Arrange for the distribution of Officials Results to the SOM, entrants, organizers and the MCSCC.

1.13 Race Staff Director

The Race Staff Director shall be responsible for:

1.13.1 The promotion and recruitment of all specialties.

1.13.2 Maintaining a database of race staff names and addresses.

1.13.3 Collecting, documenting and reporting to the MCSCC Competition Director any reports and complaints from the Chiefs of Specialty.

1.13.4 Mediating any disputes or problems between specialties.

1.13.5 Proposing any rule changes affecting Race Staff to the MCSCC Contest Board and in general represent race staff.

1.13.6 Issuing all Race Staff Licenses

1.14 Chief Starter

1.14.1 This person is responsible to the Steward if the Event and the Chief Starter for the proper operation of the station.

1.14.2 This person is responsible for the recruiting and training of all Starter Staff.

1.14.3 Supply to each club sponsoring a race a list of starters available for that event from which the club may designate a Chief Starter for that event.

1.15 Chief of Flagging and Communications

The Chief of Flagging and Communications shall be responsible for:

1.15.1 The recruiting and training of all corner staff and communications staff.

1.15.2 The assigning of corner staff and communications staff at each event.

1.15.3 The establishment and operation of the communications system, which shall include all corner stations and a central control.

1.15.4 Keeping a race log of all communications on the event network.

1.16 Chief of Timing and Scoring

The Chief of Timing and Scoring shall be responsible for the accurate timing and scoring of the event in accordance with the GCR, specifically he/she shall:

1.16.1 Recruit, train, assign and supervise qualified personnel to time and score the event.

1.16.2 Furnish the Chief Steward and the Operating Stewards any times or results that they may request.

1.16.3 Maintain records of official times and lap charts for all competing cars.

1.16.4 Compile and publish the Official Results of all competitions, submit copies of the completed Official Results to the Race Chairman for distribution and submit complete Official Results within seven days to the MCSCC Points Keeper.

1.17 Chief of Technical Inspection and Impound

The Chief of Technical Inspection and Impound shall ascertain that the cars comply with the GCR, Spec Books and Supplementary Regulations. Specifically he/she shall be responsible for:

1.17.1 The recruiting and training of all Technical Inspection and Impound Staff.

1.17.2 Approve cars that comply with all safety regulations.

1.17.3 Conduct inspections of cars at the request of the Chief Steward.

1.17.4 Report to the Chief Steward any cars that he/she finds not to conform with any requirements of the GCR.

1.18 Chief of Safety and Rescue

The Chief of Safety and Rescue shall be responsible for:

1.18.1 The recruiting and training of all Safety and Rescue Staff.

1.18.2 The assigning of Safety and Rescue Staff at each event.

1.18.3 The dispatching of Safety and Rescue personnel and vehicles to on-track incidents at the directions of the Operating Stewards.

1.18.4 The positioning of all Safety and Rescue vehicles at an event, with approval of the Chief Steward.

1.18.5 The maintenance of all Safety and Rescue equipment.

1.19 Registrar

The Registrar shall be responsible for:

1.19.1 Verify all entrants have a valid State Driver's License for all High Performance Driving Education and High Speed Autocross events.

1.19.2 Verify, when appropriate, that all entrants have a valid accepted Competition License for wheel to wheel competition.

1.19.3 Confirm permanent car numbers and assign temporary numbers to avoid duplication within race groupings.

1.19.4 Distribute tech sheets for each entry.

1.19.5 Promptly deliver completed Timing and Scoring cards to the Chief of Timing & Scoring for each entry.

2 Stewards Qualifications

2.1 Steward in Training: Any member of MCSCC club may apply for a Steward in Training License.

2.2 Operating Steward: To be recommended for an Operating Steward License a Steward in Training shall:

2.2.1 Be a member of a MCSCC club.

2.2.2 Have worked as a Pit Lane Steward and a Back-Up Steward at the following MCSCC sanctioned events under the guidance of a Steward appointed, by the Stewards Committee, for each event:

2.2.2.1 Driver's School

2.2.2.2 Autocross School

2.2.2.3 Road Race Event

2.2.2.4 Autocross Event

2.3 Chief Steward: To be recommended for Chief Steward License an Operating Steward License holder shall:

2.3.1 Be a Regular Member of a MCSCC Club

2.3.2 Have worked as a Pit Lane Steward, Back-Up Steward and an Operating Steward at the following MCSCC Sanctioned events under the guidance of a Senior Steward appointed, by the Stewards Committee, for each event:

2.3.2.1 Driver School

2.3.2.2 Autocross School

2.3.2.3 Road Race Event

2.3.2.4 Autocross Event

2.3.3 Have been a Steward of the Meet.
2.3.4 Have been Assistant Chief Steward.
2.3.5 Have worked one full day on a corner.

3 Flagging and Communications

3.1 Corner Captain

3.1.1 The Corner Captain has the sole authority for the proper operation of the corner. On matters of race control on his/her corner, his/her decision will supersede the advice or decision of any race official except the Chief Steward of the Event and/or the Race Staff Steward. Duties include:

3.1.1.1 Direction of all activities on the corner
3.1.1.2 Insure the proper display of all flags at the corner.
3.1.1.3 Sole authority for calling a waved yellow flag or emergency equipment (i.e. medical help, ambulance, fire truck, wrecker, etc.).
3.1.1.4 Direct the return to the course of any race car stopped on or off course.
3.1.1.5 Submit a written report of any accident at the corner, plus any reports requested by the Chief Steward of the Event and/or the Race Staff Steward.
3.1.1.6 Instruction of novice personnel.
3.1.1.7 The Corner Captain shall wear a distinguishing article of clothing and carry a whistle.

Competition Regulations

1. General Standards

The rules and/or regulations set forth herein are designed to provide for the orderly conduct of racing events and to establish minimum acceptable requirements for such events. These rules shall govern the condition of all Midwestern Council of Sports Car Club events, and, by participation in these events, all participants are deemed to have complied with these rules. No express or implied warranty of safety shall result from publication of or compliance with these rules and/or regulations. They are intended as a guide for the conduct of the sport and are in no way a guaranty against injury or death to participants, spectators, or others.

1.1 The Contest Board, having promulgated these regulations, may modify, add to, delete from, or grant exceptions to these regulations at any time.

1.2 The event supplemental regulations for each event supersede the rules written in the MC General Competition Rules for that event ONLY.

1.3 The Contest Board reserves the right to prevent any entrant or entrants from participating in any Council event. Likewise, the Chief Steward of the Event may prevent an entrant from competing. The Race Chairman shall be responsible only for administrative functions relative to planning, organizing, and running the event. The safety and general conduct of the event, pertaining to competitive matters, rules, regulations, interpretations, etc., shall be empowered to the Chief Steward of the Event.

1.4 It shall be the duty of every MCSCC member to conduct him/herself, while representing the Club, in a manner that shall not be prejudicial to the interests of the Club or bring unnecessary criticism of the Club.

1.5 No MCSCC member, whether licensed or not, shall enter, or compete in, any event which is not approved by the Contest Board of the MCSCC. It may be assumed that the Contest Board approves of all events unless a contrary notice is published.

1.6 The Chief Steward of the Event is the final authority for the general conduct of the event in accordance with the GCR and the supplementary regulations for the event.

1.7 The Chief Steward of the Event may not compete at that event.

1.8 The Chief Steward of the Event need not be a Steward of the sponsoring Club.

1.9 MCSCC requires that all events be covered by the following forms of insurance for the minimum limits shown:

1.9.1 EVENT LIABILITY

Each occurrence for Personal Liability, Advertising Liability, Products Liability and Completed Operations Liability	$2,000,000
Each occurrence for Medical Malpractice Liability and Participant Legal Liability	$1,000,000
Each occurrence for Errors and Omissions	$50,000

1.9.2 PARTICIPANT ACCIDENT INSURANCE

Accidental Death & Dismemberment	$3,000
Medical Reimbursement	$3,000

1.10 Fees for each points race sanctioned by Midwestern Council, where Midwestern Council is not the primary sponsor, shall be paid to the Council by the Club sponsoring said races, due 30 days after the completion of the points race.

1.10.1 Fees:

Sanction Fee	$10 per entry per event
Equipment Fee	$200 per event

1.11 It is recommended that the Chief Steward of each Club be a Midwestern Council Full Competition License holder or an active HSAX competitor.

1.12 The Contest Board reserves the right to postpone or cancel any scheduled event.

1.13 The Contest Board will appoint, from time to time, official representatives in various parts of the area. The duties of these representatives will be to act as liaison between the individual competitor and the Contest Board, to report violations of the spirit and letter of the regulations, and to advise the Board on rules and procedures.

1.14 The entrant and/or driver, in signing the entry form for any MCSCC event, elects to use the course of the event at his own risk, and thereby releases and forever discharges the MCSCC, together with its heirs, assigns, officers, representatives, agents, officials, employees, and/or reputation, that may be received by said entrant and/or driver, and from all claims of said injuries to parties listed above growing out of, or resulting from the event contemplated under the entry form, or caused by any construction or condition of the course over which the event is held.

1.15 By the mere fact of entering an MCSCC event, every participant agrees to abide by the regulations and the supplementary regulations pertaining to that event, and recognizes as the only authority the Chief Steward of the Event, Competition Director of the MCSCC, and above these, the contest Board of the MCSCC.

1.16 Only officials may use motorcycles, mini bikes, etc., in the paddock area or as noted in the event's supplementary regulations.

1.17 Riding on the exterior coachwork on vehicles in the paddock is prohibited.

1.18 The following shall apply for all competition events sanctioned by the Midwestern Council of Sports Car Clubs except as may be contrary to local laws and ordinances:

1.18.1 An enclosed medical area which is clean, dry and has good lighting and is of such size as to accommodate treatment of two (2) non-ambulatory patients simultaneously is required. A public telephone should be available either in, or near, the medical facility.

1.18.2 Emergency Vehicles

1.18.2.1 One (1) ambulance properly licensed for operation, equipped for Advanced Life Support (ALS) and capable of transporting at least two (2) non-ambulatory patients simultaneously is required. A minimum of two (2) ambulances is strongly recommended.

1.18.2.2 One (1) fire truck or more as necessary, with fire-fighting equipment for fight Class A, B, and C fires. Pressurized dry chemical and pressurized water equipment should be on the vehicle. A minimum of two (2) fire trucks is strongly recommended.

1.18.2.3 One (1) wrecker capable of raising either end of any race car participation in the race event, and capable of lifting any participating formula car by its roll bar so that it is suspended completely off the ground. A minimum of two (2) wreckers is highly recommended.

1.18.3 A porta-power of at least four ton capacity with spreader wedge and push-bar attachments, or its equivalent , should be available for use at all Midwestern Council of Sports Car Clubs race meetings.

1.18.4 Medical Personnel: The following shall be in attendance before any on track activities can begin:

1.18.4.1 **Minimum Personnel Required:** Two (2) Emergency Medical Technicians – Paramedic or Ambulance (EMT-P or A) as mandated by Local or State Law, who are properly licensed to provide ALS treatment and transport, are required per ambulance. In the event that only one ambulance is utilized, one additional person who meets or exceeds the highest licensure of the designated ambulance crew must be present to staff the medical area.

1.18.4.2 It is strongly recommended that four (4) Emergency Medical Technicians- Paramedic or Ambulance (EMT-P or A), as mandated by Local or State law, who are properly licensed to provide ALS treatment and transport, be available to staff two (2) ambulances. The second crew may be used to staff the medical area.

1.18.4.3 Doctors (M.D. or D.O.), emergency medicine physician preferred, and other allied health professionals (PA, RN, EMT's) in excess of the minimum requirements are highly recommended. Such persons may be participants in the event and should be identified in the event of a major incident. NOTE: Additional EMT-P's and/or EMT-A's are strongly recommended. A minimum of two (2) EMT-P's and/or EMT-A's per required ambulance is very strongly recommended.

2. General Regulations

2.1 Drivers will at all times be responsible for the conduct of their crews, and any offense committed by a crew member will be chargeable directly to the driver. This particularly applies during the running of an event when the driver is away from his pit.

2.2 No person who has consumed any alcoholic beverage on the day of any MCSCC race or hill climb will be allowed to participate.

2.3 The use of any narcotic or dangerous drug as defined by Federal and/or State laws as illegal, by any driver, crew member, or official immediately prior to, or during, an MCSCC event is specifically prohibited.

2.4 Drivers must attend the drivers' meeting.

2.5 Only the registered driver and co-driver(s) of a car may race or practice the car. It is not permissible to "try out" a car unless one is registered to drive it.

2.6 Only one (1) person may ride in the competition car on a victory lap. Rider must be 18 years of age or older, or 12 years of age or older when the driver is a parent or permanent legal guardian of the rider.

2.7 The Contest Board reserves the right to bar any car from competition should there be any infraction of the competition rules, or if, for any reason, the Board is of the opinion that the car is unsafe. Likewise, the Chief Steward of the event may prevent a car from competing for the same reason.

2.8 The first three (3) finishing cars in class, required by a contingency program or the Chief Steward of the Event, shall report to impound immediately following the race. At such impound, cars may be weighed and/or inspected for conformity to the rules of the class in which the car had competed. This weight and inspection will be conducted with the car as raced, with no modifications, as it leaves the course, it's the driver's responsibility to ascertain his/her finishing position and present his/her car to impound, if among the top three finishers in class, failure to do so may result in disqualification.

2.9 Permanent numbers may be issued to Midwestern Council License holders only.

2.9.1 A competitor's permanent number will be reserved for that competitor to use at each MC event until that event's pre-registration deadline. After the pre-registration deadline passes, the number may be assigned to any competitor who requests it.

2.9.2 Permanent number assignments expire with the competitor's license and may be renewed with the license.

2.9.3 A competitor's permanent number will be reserved for that competitor to renew until April 15th of the following year. After April 15th the number may be assigned as a permanent number to any MC license holder who requests it.

3. Licenses

3.1 Administration

3.1.1 Medical Forms

3.1.1.1 A valid Midwestern Council Medical form must be submitted by all who seek any Midwestern Council Competition License. Medical forms will expire on November 1st of the last year it is valid.

3.1.1.1.1 The form will be valid for the terms as described below. Driver's age as of Jan 1st of the current GCR year will be used.

Ages 14 – 39 – Medical form will be valid for five (5) years
Ages 40 – 49 – Medical form will be valid for three (3) years
Ages 50 – 69 – Medical from will be valid for two (2) years
Ages 70+ - Medical form will be valid for one (1) year

3.1.1.1.2 A driver who has experienced serious medical conditions, such as but not limited to: heart attack, major surgery, stroke, cancer, loss of consciousness, during the time covered by a medical form will have his/her medical form declared invalid and must submit a new form. Failure to report any changes that would affect your medical form to the Licensing Director or Competition Director shall result in having their competition privileges revoked indefinitely.

3.1.1.1.3 A driver who is transported off-site for a medical incident cannot compete in an event after being released unless the attending physician signs a release at the treatment facility stating their ok to participate in a competitive event. In the event the attending physician does not sign a release the driver will automatically need to get a new medical form completed by their medical provider.

3.1.1.2 In addition to the MCSCC Medical Form, MCSCC recognizes and approves Medical Forms from the following Race Sanctioning/Governing Bodies:

3.1.1.2.1 SCCA
3.1.1.2.2 FIA
3.1.1.2.3 CASC
3.1.1.2.4 Skip Barber
3.1.1.2.5 VSCDA
3.1.1.2.6 SVRA
3.1.1.2.7 HSR
3.1.1.2.8 BMW CCA
3.1.1.2.9 FAA Approved Flight Medical
3.1.1.2.10 N.A.S.A
3.1.1.2.11 DMV CDL

3.1.1.3 Other Medical Forms may be accepted. However any other medical form not listed above shall be submitted for approval of the MCSCC Competition Director at least thirty (30) days prior to an event at which the applicant wishes to compete.

3.1.1.4 The physician examination portion of the Medical Form shall be completed by a currently licensed M.D., D.O., PA-C or NP.

3.1.1.5 Any person found falsifying information on a Medical Form shall have his/her competition privileges revoked indefinitely.

3.1.1.6 Medical forms shall be submitted to the MCSCC Licensing Director.

3.1.2 Application and Renewal Deadlines

3.1.2.1 All medical forms and applications for any license action must be received by the MCSCC Licensing Director no later than the Wednesday prior to the event in which the applicant wishes to compete. By exception, and with no guarantee of approval, this requirement can be waived at any event by agreement of (any two of) the Licensing Director, Competition Director, and Chief Steward of the Event; after review of the extenuating circumstances of the applicant.

3.1.3 Fees

The Fees for application or renewal of a MCSCC Competition License are as follows:

License Type	Before March 15th	After March 15th
Driver School Permit	$45.00	$45.00
Novice Renewal	$45.00	$75.00
Full Competition Renewal	$45.00	$75.00
Provisional	$75.00	$85.00
Probation License Renewal	$45.00	$75.00
MCSCC Endurance Permits	$45.00	$75.00

Variance fee to renew any license is the same as the cost of a driver school.

3.2 MCSCC Driver School Application

3.2.1 Purpose

A Driver School Application is required to enter all MCSCC sanctioned driver schools when no other current MCSCC competition license is held by the applicant.

3.2.2 Eligibility

To be eligible to enter an MCSCC Driver School an applicant shall:

3.2.2.1 Be at least eighteen (18) years of age.

3.2.2.2 Fourteen (14) through Seventeen (17) year olds may enter an MCSCC Driver School providing all the following Minor applicant criteria have been met.

3.2.2.2.1 All Fourteen (14) through Seventeen (17) year old participants in W2W and/or HSAX must successfully complete a full day MC Driver School for the type of competition in which they wish to participate.

3.2.2.2.1.1 All 14/15 year olds must provide documented, verifiable evidence of significant prior motorsport competition experience to the Competition Director prior to submitting an entry to the school. Guidelines for this experience requirement will be documented and maintained by the Competition Director. All 14/15 year old applicants must receive approval from the Competition Director and the Chief of School prior to submitting an entry to the school

3.2.2.2.1.2 Upon successfully completing a Driver School a Minor Participation License (MPL) or HSAX Minor Participation Certificate will be issued.

3.2.2.2.1.3 Driver School requirement may be waived for 16/17 year olds only, with an acceptable racing resume and with approval by the Competition Director. All 14/15 year olds must successfully complete a Driver School to be issued a Minor Participation License.

3.2.2.2.2 A **"MINOR RELEASE AND WAIVER OF LIABILITY AND INDEMNITY AGREEMENT"** (a.k.a. Minor Release) form must be signed in person at event registration by at least one living Parent or Legal Guardian prior to a minor being allowed to participate in a Midwestern Council event. The signature must be witnessed by the Midwestern Council Registrar (or delegate). Witness must be at least 18 years old.

3.2.2.2.3 All minor W2W school participants must submit a Midwestern Council medical form (no other forms accepted), or a Self-Certification Form signed by one of the signatories of the "Minor Release" document.

3.2.2.2.4 If at any time the attending parent/guardian intends to leave the track property, that parent/guardian is to inform the Chief Steward of intent to leave. Upon returning, the parent/guardian is to report to the Chief Steward. While the parent/guardian is away, the minor will not be allowed in restricted areas.

3.2.2.2.5 14 through 17 year old W2W participants shall only be eligible for a "Minor Participation License" (MPL). While holding an MPL the participant shall conform to all regulations for both Novice and Probation licenses as detailed in the GCR. In addition, the driver must personally present the MPL to the event Chief Steward accompanied by the attending parent/guardian. Renewal of an MPL is similar to that of a Novice license. HSAX Minor Participation Certificates are to be sent to the Competition License Director for second year renewal as would the MPL.

3.2.2.2.6 Upon completion of 3 MCSCC sanctioned W2W events, the holder of an MPL may remove the novice "X"s from the car.

3.2.2.2.7 Upon reaching 18, Minor Participation License holders are eligible to upgrade. Upgrading to a Full Competition license requires certification in three (3) MCSCC sanctioned events AND staffing an entire day on a corner. If those criteria are not met, then the MPL is upgraded to a Novice with the equivalent certifications.

3.2.3 Be a regular member of a MCSCC Club.

3.2.4 Have a valid, approved MCSCC Medical Form on file with the MCSCC Licensing Director.

3.2.5 Have paid the fees as defined in GCR License Section 3.1.3.

3.3 Novice License

3.3.1 Requirements

3.3.1.1 To be eligible to obtain an MCSCC Novice Competition License an applicant shall:

3.3.1.1.1 Have been issued a current MCSCC Driver School Application.

3.3.1.1.2 Have satisfactorily passed a written exam of his/her knowledge of the rules and regulations herein.

3.3.1.1.3 Have satisfactorily passed an MCSCC sanctioned driver school.

3.3.1.1.4 Have a valid, approved MCSCC Medical Form on file with the MCSCC Licensing Director.

3.3.1.2 The MCSCC Contest Board shall approve or reject all applications for a Novice License.

3.3.2 Novice Observation

3.3.2.1 A student that does not meet the requirements to pass the MCSCC sanctioned driver school may be placed under Novice Observation by the MCSCC Contest Board.

3.3.2.2 Novice Observation may be repealed at any time by the MCSCC Competition Director, or the student may be remanded back to school.

3.3.2.3 Events that may be completed while under Novice Observation shall count only toward an upgrade to a Novice Competition License.

3.3.3 Renewal

3.3.3.1 To be eligible to renew a MCSCC Novice License an applicant shall:

3.3.3.1.1 Be at least eighteen (18) years of age.

3.3.3.1.2 14 through 17 year olds must conform to all relevant criteria.

3.3.3.1.3 Be a regular member of a MCSCC Club.

3.3.3.1.4 Have a valid, approved MCSCC Medical Form on file with the MCSCC Licensing Director.

3.3.3.1.5 Have paid the fees as defined in GCR License Section 3.1.3.

3.3.3.1.6 Have successfully competed in a minimum of one (1) MCSCC sanctioned W2W (Wheel To Wheel) event during the previous year.

3.3.3.2 A Novice license may be renewed twice. All Novice licenses are to be submitted to the MCSCC Licensing Director when requesting a renewal or upgrade.

3.3.4 Competition Requirements

3.3.4.1 A novice license holder shall display an “X” of contrasting color on the front, rear and both sides of the vehicle, as large as and not in line with their car numbers.

3.3.4.2 A student on Novice Observation shall display an "X" of contrasting color on the front, rear and both sides of their vehicles, as large as and not in line with their car numbers.

3.3.4.3 At each MCSCC W2W event entered, a Novice or Provisional License holder shall submit his/her license to Technical Inspection. Said license shall be certified by the Chief Steward of the Event or MCSCC Competition Director (or their designated representatives) upon satisfactory participation in the event.

3.3.4.4 At the end of the event, a Novice License holder shall retrieve his/her license from the Chief Steward of the Event or a designated person.

3.4 Full Competition License

3.4.1 Requirements

3.4.1.1 To be eligible to receive a Full Competition license a Novice license holder shall:

3.4.1.1.1 Have received a certification in three (3) MCSCC sanctioned W2W events after receiving a Novice License.

3.4.1.1.2 Only one (1) certification may be received for each event. Maximum available signoffs for consecutive days of competition will be two (2).

3.4.1.1.3 Staff an entire day on a corner at a MCSCC W2W event.

3.4.1.1.3.1 Staffing requirement recommended for Novices with a 2022 or 2021 license.

3.4.1.2 A written request of the driver’s intentions to upgrade and the applicants Novice License(s) shall be filed with the MCSCC Licensing Director.

3.4.1.3 There shall be no fees for upgrading a license, unless the applicant is also renewing his/her current license.

3.4.2 Renewal

3.4.2.1 To be eligible to renew a MCSCC Full Competition License an applicant shall:

3.4.2.1.1 Be at least eighteen (18) years of age

3.4.2.1.2 Be a regular member of MCSCC.

3.4.2.1.3 Have a valid, approved MCSCC Medical Form on file with the MCSCC Competition Licensing Director.

3.4.2.1.4 Have paid the fees as defined in GCR License Section 3.1.3.

3.4.2.1.5 Have received a certification of satisfactory participation in a minimum of three (3) MCSCC sanctioned W2W events during the previous 2 years.

OR

3.4.2.1.6 Have satisfactorily competed in sixty (60) laps of racing in a minimum of two (2) MCSCC sanctioned W2W events during the previous 2 years.

OR

3.4.2.1.7 Have satisfactorily competed in a minimum of twenty (20) laps of racing in a maximum of one (1) MCSCC sanctioned W2W events during the previous 2 years.

OR

3.4.2.1.8 Verification of a current SCCA Full Competition or Pro License.

3.4.2.2 Full Competition Licenses shall not be renewed using GCR License Section 3.4.2.1.7 in consecutive years. Second renewal using GCR License Selection 3.4.2.1.7 shall revert the license holder to a Novice *or* Provisional License.

3.5 Instructor License

3.5.1 Requirements

3.5.1.1 To be eligible to receive an Instructor License and applicant shall:

3.5.1.1.1 Have held a current Full Competition License for at least one (1) year.

3.5.1.1.2 Have competed in nine (9) MCSCC sanctioned W2W races after receiving a Full Competition License.

3.5.1.1.3 Have been an Assistant Instructor at least three (3) times at MCSCC sanctioned driver schools.

3.5.1.2 The Contest Board shall approve or reject all applications for Instructor Certification.

3.5.1.3 There shall be no fees for upgrading a license, unless the applicant is also renewing his/her current license.

3.5.2 Renewal

3.5.2.1 The applicant shall meet the requirements to renew his/her Full Competition License.

3.5.2.2 The applicant shall have instructed at least once during the previous year at a MCSCC Driver School.

3.6 Provisional License

3.6.1 Requirements

3.6.1.1 To be eligible for a Provisional License an applicant shall:

3.6.1.1.1 Be at least eighteen (18) years of age.

3.6.1.1.2 Be a regular member of a MCSCC.

3.6.1.1.3 Have a valid, approved MCSCC Medical Form on file with the Competition Licensing Director

3.6.1.1.4 Have paid the fees as defined in GCR License Section 3.1.3.

3.6.1.1.5 Have held an accepted competition license within the previous four (4) years (e.g. MC Full Competition, WHRRI, IMSA Full, CASC, SCCA Pro, Full Competition, Vintage or at the discretion of the MCSCC Competition Director.)

3.6.1.1.6 All applications submitted to the MCSCC Licensing Director for a Provisional License are subject to approval by the MCSCC Competition Director

3.6.1.2 Fees, as defined in section 3.1.3, for requesting a Provisional License are Non-Refundable.

3.6.2 Administration

3.6.2.1 At each MCSCC W2W event, a Provisional/Novice License holder shall submit his/her license to Technical Inspection. Said license shall be certified by the Chief Steward of the Event or MCSCC Competition Director (or their designated representatives) upon satisfactory participation in the event.

3.6.2.2 Upon certification of satisfactory participation in three (3) MCSCC sanctioned W2W races, the holder of a Provisional license may submit his/her license to the MCSCC Licensing Director for upgrade. No fee is attached to the upgrade unless the applicant is renewing his/her license.

3.6.2.3 A Provisional License may be upgraded to Full Competition, by the MCSCC Competition Director or the MCSCC Contest Board at any time.

3.6.2.4 A Provisional License may be revoked by the MCSCC Competition Director or the MCSCC Contest Board at any time.

3.7 Probation License

3.7.1 Requirements

3.7.1.1 Upon being issued a Probation License, one's competition license shall be simultaneously surrendered.

3.7.1.2 A probation license shall personally be presented by the holder to the event Chief Steward of each MCSCC W2W race entered before entering the track for practice, qualifying or competition until the conditions of the probation has been satisfied.

3.7.1.3 Each event Chief Steward shall certify participation in each event with his/her signature and any comments deemed necessary as provided by the license form.

3.7.1.4 The holder of the Probation License is responsible for picking up his/her license from the event Chief Steward before leaving each event entered.

3.7.2 Renewal

3.7.2.1 To be eligible for renewal, applicant shall have fulfilled all the renewal requirements of the license level held at the time the Probation License was issued.

3.7.2.2 Probation License shall accompany MCSCC Competition License Renewal form and be returned to applicant having fulfilled all requirements by the MCSCC Licensing Director.

3.7.3 Administration

3.7.3.1 Upon fulfilling the requirements of Probation, the Probation License shall be submitted with a written request to upgrade to the level of license held when the Probation was issued to the MCSCC Licensing Director. There will be no fee required to upgrade unless the applicant is renewing at the same time.

3.7.3.2 The MCSCC Competition Director and/or Contest Board may alter or revoke the conditions of probation at any time.

3.7.3.3 If upgrade to the license level held at the time of the issuance of the probation is judged in order, a written request to the MCSCC licensing Director signed by the MCSCC Competition Director is to accompany the Probation License for upgrade to the MCSCC Licensing Director.

3.7.3.4 The Contest Board may extend the conditions of probation or revoke one's privileges at any time.

3.8 MCSCC Endurance Novice Permit

3.8.1 Requirements

3.8.1.1 Be at least eighteen (18) years of age.

3.8.1.2 Provide proof of a valid state driver's license

3.8.1.3 Be a regular member of an MCSCC club.

3.8.1.4 Be approved by the Competition Director and Licensing Director.

3.8.1.4.1 For approval a racing resume shall be submitted showing the number of laps completed in a minimum of two endurance races by the applicant.

3.8.1.4.2 Additional on track experience is highly encouraged (HPDE, Driver Schools, additional races, etc.) and should be included in the submitted resume.

3.8.1.5 Completed a written test (same test given at schools) with a score of at least 80%.

3.8.2 Renewal

3.8.2.1 Provide proof of a valid state driver's license.

3.8.2.2 Be a regular member of an MCSCC club.

3.8.2.3 Have satisfactorily completed 30 laps in an MCSCC sanctioned endurance event in the past year.

3.8.3 Competition Requirements

3.8.3.1 Any driver running on the MCSCC Endurance Novice Permit observed to be driving in an unsafe or dangerous manner will be immediately black flagged. Drivers that receive this penalty will be required to meet with the Stewards of the event for evaluation and may be asked to go through our MCSCC Competition Driver's school before being allowed to participate.

3.8.3.2 At each MCSCC endurance event entered, an Endurance Novice Permit holder shall submit his/her permit to Technical Inspection. Said permit shall be certified by the Chief Steward of the Event or MCSCC Competition Director (or their designated representatives) upon satisfactory participation in the event.

3.8.3.3 At the end of the event, an Endurance Novice Permit holder shall retrieve his/her permit from the Chief Steward of the Event or a designated person.

3.9 MCSCC Endurance Permit

3.9.1 Requirements

3.9.1.1 Have been issued a current MCSCC Endurance Novice Permit.

3.9.1.2 Have satisfactorily completed four (4) MCSCC sanctioned endurance events.

3.9.1.3 The MCSCC Contest Board shall approve or reject all applications for an Endurance Permit.

3.9.2 Renewal

3.9.2.1 Provide proof of a valid state driver's license.

3.9.2.2 Be a regular member of an MCSCC Club.

3.9.2.3 Have satisfactorily completed 30 laps in an MCSCC sanctioned endurance event during the previous 3 years.

3.10 Other Licenses

3.10.1 An MCSCC Full Competition license can be issued to individuals holding the following current licenses:

3.10.1.1 SCCA Full Competition or Pro

3.10.1.2 N.A.S.A. Full Competition

3.10.1.3 Autobahn Country Club Competition – Level 1 and 2

If:

3.10.1.4 The applicant meets the requirements as defined in GCR license section 3.4.2.1.1 through 3.4.2.1.5.

3.10.1.5 A copy of his/her current license is on file with the MCSCC Licensing Director.

3.10.2 A current SCCA Novice Permit holder may be issued a MCSCC Novice license if:

3.10.2.1 The Novice Permit has at least the Driver School requirements signed off

3.10.2.2 The applicant meets the requirements as defined in GCR sections 3.3.3.1.1 through 3.3.3.1.5.

3.10.2.3 A copy of his/her current license is on file with the MCSCC Licensing Director.

3.11 Variances

3.11.1 Any request for issuance or upgrading of licenses which may vary from the above rules shall:

3.11.1.1 Be approved or rejected by the MCSCC Competition Licensing Director and Competition Director.

3.12 Official Licenses

3.12.1 Steward Licenses

3.12.1.1 License Certifications: There shall be two (2) classes of Steward Licenses.

3.12.1.1.1 Autocross Steward

3.12.1.1.2 Race Steward (Wheel to Wheel or W2W).

3.12.2 License Grades

3.12.2.1.1 Steward in Training

3.12.2.1.2 Operating Steward

3.12.2.1.3 Chief Steward

3.13 Steward in Training: Any member of MCSCC may apply for a Steward in Training License.

3.14 Operating Steward

3.14.1 To be recommended for an Operating Steward License a Steward in Training shall:

3.14.1.1 Be a member of a MCSCC club.

3.14.1.2 Have worked as a Pit Lane Steward and a Back-Up Steward at the following MCSCC sanctioned events under the guidance of a Senior Steward appointed, by the Stewards Committee, for each event:

3.14.1.2.1 Driver School

3.14.1.2.2 Autocross School

3.14.1.2.3 Road Race Event

3.14.1.2.4 Autocross Event

3.15 Chief Steward

3.15.1 To be recommended for a Chief Steward License an Operating Steward License holder shall:

3.15.1.1 Be a regular member of a MCSCC club.

3.15.1.2 Have worked as a Pit Lane Steward and an Operating Steward at the following MCSCC sanctioned events under the guidance of a Senior Steward appointed, by the Stewards Committee, for each event:

3.15.1.2.1 Driver School

3.15.1.2.2 Autocross School

3.15.1.2.3 Road Race Event

3.15.1.2.4 Autocross Event

3.15.1.3 Have been a Steward of the Meet

3.15.1.4 Have been an Assistant Chief Steward

3.15.1.5 Have worked one full day on a corner.

3.16 License Issuance

3.16.1 The Competition Director shall approve all Stewards Licenses.

3.16.2 The steward committee shall review and make recommendations to the Competition Director pertaining to the issuance of a Steward License of any grade.

3.16.3 It is highly recommended that all bridge stewards have, at one time, held a competition license.

3.17 License Renewals

3.17.1 Racing Steward Licenses

3.17.1.1 Chief Steward License

To renew a Chief Steward License an applicant shall:

3.17.1.1.1 Be a regular member of a MCSCC club

3.17.1.1.2 Have participated in any of the following capacities during the last calendar year:

3.17.1.1.2.1 Chief Steward of a MCSCC sanctioned race event.

3.17.1.1.2.2 Assistant Chief Steward of a MCSCC sanctioned race event.

3.17.1.1.2.3 Operating Steward of a MCSCC sanctioned race event.

3.17.1.1.3 Have fulfilled the following requirements during the last calendar year, not including the requirements above.

3.17.1.1.3.1 Participated twice as an Operating Steward.

3.17.1.1.3.2 Worked one (1) full day in any of the race staff specialties; Corner (preferred); Central Control; Timing & Scoring; Grid; Safety & Rescue

3.17.1.1.3.3 Attended three (3) Stewards Committee meetings.

3.17.1.2 Operating Steward

To renew an Operating Stewards License an applicant shall:

3.17.1.2.1 Be a member of a MCSCC club.

3.17.1.2.2 Have fulfilled the following requirements during the last calendar year:

3.17.1.2.2.1 Participated twice as an Operating Steward.

3.17.1.2.2.2 Worked one (1) full day in any of the race staff specialties; Corner (preferred); Central Control; Timing & Scoring; Grid; Safety & Rescue.

3.17.1.2.2.3 Attend three (3) Stewards Committee meetings.

3.17.1.3 **Steward in Training:** A Steward in Training License may be renewed twice.

3.17.1.4 Any licensed steward not completing the requirements for the current grade of license may be issued, at the discretion of the Competition Director, the next lower grade of License (i.e. from Chief Steward to Operating Steward).

3.17.2 Autocross Steward Licenses

3.17.2.1 Chief Steward:

To renew a Chief Steward License an applicant shall:

3.17.2.1.1 Be a regular member of a MCSCC club.

3.17.2.1.2 Have participated in one of the following capacities during the last calendar year:

3.17.2.1.2.1 Chief Steward of a MCSCC sanctioned Autocross Event.

3.17.2.1.2.2 Assistant Chief Steward of a Racing Event.

3.17.2.1.2.3 Operating Steward of a MCSCC sanctioned Autocross Event.

3.17.2.1.3 Have fulfilled the following requirements during the last calendar year, not including the requirements above.

3.17.2.1.3.1 Participated once as an Operating Steward.

3.17.2.1.3.2 Worked one (1) full day in any of the race staff specialties listed below, or at least 18 on-track sessions in any combination of these specialties: Corner (preferred); Central Control; Timing & Scoring; Grid; Safety & Rescue.

3.17.2.1.3.3 Attended two (2) Stewards meetings.

3.17.2.2 Operating Steward:

To renew an Operating Steward License an applicant shall:

3.17.2.2.1 Be a member of a MCSCC club.

3.17.2.2.2 Have fulfilled the following requirements during the last calendar year.

3.17.2.2.2.1 Participated once as an Operating Steward.

3.17.2.2.2.2 Worked one (1) full day in any of the race staff specialties listed below, or at least 18 on-track sessions in any combination of these specialties: Corner (preferred); Central Control; Timing & Scoring; Grid; Safety & Rescue.

3.17.2.2.2.3 Attended one (1) Steward Committee meeting.

3.17.2.3 **Steward in Training:** A steward in Training license may be renewed twice.

3.17.2.4 Any licensed steward not completing the requirements for the current grade of license may be issued, at the discretion of the Competition Director in consultation with the Stewards Committee, the license grade held by the steward during the previous season (i.e. Chief Steward stays as Chief Steward).

3.17.3 **License Expiration:** Steward Licenses are valid from January 1st of the current year until December 31st of the current year.

4. Protests

4.1 Who May Protest

4.1.1 The right to protest shall rest with the Chief Steward of the Event or any driver taking part in the competition in question.

4.1.2 The Chief Steward of the Event may protest the legality of any vehicle taking part in the competition that he/she believes to be in violation of the GCR.

4.1.3 A driver may protest the provisional results or the starting grid of the competition, or any competitor's car in the same class, which the protestor believes to be in violation of the GCR (hereinafter in this section collectively referred to as "the rules").

4.1.4 A driver may not protest, as such, another driver's driving ability, driving tactics, or incidents occurring on the track. He may, however, bring such characteristics or occurrences to the attention of the Chief Steward of the Event or the

members of the Contest Board for observation of the driver in question. The decision whether there are grounds for disciplinary action or further investigation of the matter shall be made by said officials.

4.2 Driver's Protest of Provisional Results or Grids Shall:

4.2.1 Be made in writing, specifying the error(s) made on the results or grids.

4.2.2 Signed by the protestor(s).

4.2.3 Addressed to the Chief Steward of the Event and delivered to him/her in person or to an Assistant Chief Steward at the control point for the race.

4.2.4 Be promptly forwarded to the SOM's.

4.2.5 A protest against a starting position shall be made within thirty (30) minutes of the posting of starting grids.

4.2.6 A protest against provisional results of a competition shall be made within thirty (30) minutes of the posting of the provisional results.

4.2.7 No protest fee is required.

4.3 Driver's Protest of Vehicle Legality Shall:

4.3.1 Be made in writing, specifying which sections of the GCR are alleged to have been violated.

4.3.2 Signed by the protestor(s).

4.3.3 Addressed to the Chief Steward of the Event and delivered to him/her in person or to an Assistant Chief Steward at the control point for the race.

4.3.4 Be promptly forwarded to the SOM's.

4.3.5 Be lodged no later than One (1) hour prior to the start of the competition. The SOM may extend this time limit in exceptional cases where the protestor can demonstrate that evidence pertinent to the protest was not available within the time limit, or where the protestor can demonstrate he/she was unable to meet the deadline due to circumstances beyond his/her control.

4.3.6 Be accompanied by a protest fee of twenty-five dollars ($25).

4.4 Chief Steward's Protest of Vehicle Legality Shall:

4.4.1 Be made in writing, specifying which sections of the GCR are alleged to have been violated.

4.4.2 Be signed by the Chief Steward.

4.4.3 Be promptly forwarded to the SOM's.

4.4.4 Be received by the SOM prior to the posting of the official results of the last race.

4.4.5 No protest fee is required.

4.5 Protest Against Vehicles:

Drivers taking part in a competition may protest a car in the same class as not conforming to the rules. The protest may request that the car be disassembled, inspected, or any other test made, provided he/she posts a cash bond with the SOM sufficient to cover the total expenses of the disassembly, inspection and reassembly. A protest may be reduced in scope but not added to at the time the bond is set. Once a bond is posted**,** the stipulated inspections shall be completed, unless the protest is wholly or partially withdrawn by the protestor. The SOM shall apportion the costs incurred, including reassembly**,** up to the point of withdrawal, provided no illegality has been discovered.

4.6 Establishment of Bond

4.6.1 The bond shall be established by the SOM after consulting separately with the protestor, the protestee, the Chief Technical Inspector and other experts whose advice the Stewards believe shall be useful.

4.6.2 Items covered by the bond may be priced individually, with consideration given to possible logical linking of some items. This cost schedule shall be set up prior to the inspection. The bond may be awarded after tear-down on a predetermined apportionment basis. Apportionment of the bond after the fact is not permitted, except where the protestor has withdrawn all or part of the protest.

4.6.3 The bond shall be by cash or check.

4.6.4 Where circumstances warrant, the SOM may require the protested party to post bond or sign a repair order with a service establishment to cover the cost of disassembly, inspection and reassembly in the event judgment goes against him/her. The bond shall be established in the same manner as a protestor's bond.

4.7 Conduct of Inspection: The inspection and/or disassembly shall be conducted under the supervision of the SOM. They shall determine which portions of the inspection and/or disassembly, if any may be observed, and by whom. Any additional item(s) found in violation of the rules shall be forwarded to the Chief Steward of the Event.

4.8 Refusal to Allow Inspection: Refusal of an entrant or driver of a protested car to allow inspection under the terms established by the SOM shall result in immediate disqualification, a one (1) year suspension of racing privileges and loss of accrued points.

4.9 Disposition of Bond: If the car conforms to the rules, the protestor shall forfeit the bond. If the car does not conform to the rules, the protestor's bond shall be returned, and the protested party shall stand the expenses. Awarding of the bond on a predetermined apportionment basis is permitted. If the car is found to be eligible for the competition in which it was entered, the race organizers shall stand the expense of the disassembly, inspection, and reassembly. If the vehicle is not eligible, the entrant shall bear the expense, in addition to whatever penalties the SOM may impose.

4.10 Preservation of Evidence

4.10.1 Any recorded evidence such as technical date or inspectors' reports or measurements shall be forwarded to MCSCC Competition Director.

4.10.2 The SOM shall have the authority to impound parts found illegal.

4.10.3 Any items found not to comply with the rules shall be so noted in the Vehicle Logbook.

4.11 Impound

4.11.1 Protest Impound Procedures

4.11.1.1 The owner/entrant of a car being protested shall be notified, by the Chief Technical Inspector and/or the Chairman of the SOM, of said protest within thirty (30) minutes of the receipt of the protest by the Chief Steward of the event.

4.11.1.2 The protested car shall be moved immediately to an impound area as designated by the Chief Technical Inspector.

4.11.1.3 When a car must be impounded over a twelve (12) hour period, the Impound area shall be enclosed and have lockable entrances. The only authorized access to the vehicle shall be the Chief Steward of the Event, Chief Technical Inspector and SOM's.

4.11.1.4 Entrants having their vehicles impounded prior to competition shall be allowed to perform routine vehicle preparation prior to competition. All preparation procedures shall be approved and supervised by the Chief Technical Inspector. No alterations shall be performed on items specifically listed in the written protest.

4.11.1.5 The Chief Steward of the Event of the Chairman of the SOM's may release an impounded vehicle when he/she is satisfied with the data collected for the protest.

4.12 Distribution of Awards: Distribution of awards shall commence after the time period for receiving protest has elapsed. When a protest which would affect distribution of awards has been lodged, distribution, for that class, shall be withheld until the protest has been settled.

4.13 Judgment: All parties shall be bound by the decision given.

4.14 Reasonableness: It is expected that all protests shall be reasonable, logical and based on sound evidence, thus well founded. A well founded protest shall further be defined as one upon which reasonable men or women may differ. A protest should be well founded even if not upheld.

4.15 Forfeiture of Protest Fee

4.15.1 If a protest is judged to be not well founded, the protest fee shall be forfeited.

4.15.2 A protestor who has acted in bad faith or in a vexatious manner may be penalized by the SOM.

5. Penalties

5.1 All participants shall be subject to control by MCSCC, the organizing club and all appointed officials of the event.

5.2 This section provides the penalties for violation of the GCR and the Supplementary Regulations.

5.3 Breach of the Rules

5.3.1 In addition to any other offenses or violations of specific rules, each of the following is deemed a breach of the GCR.

5.3.2 Bribery or attempt to bribe anyone connected with the event; the solicitation of, acceptance of or offer to accept a bribe.

5.3.3 Any action having as its objective participation in a competition of a person of car known to be ineligible or not properly entered or credentialed.

5.3.4 Any fraudulent proceeding or act prejudicial to the interest of MCSCC or of automobile racing in general.

5.3.5 Reckless or dangerous driving, either on course, in the pits, or paddock.

5.3.6 Failure to obey a direction or order of an Official.

5.3.7 Refusing to cooperate with, interfering with or obstructing the actions of the Chief Steward of the Event, SOM's or other Officials in the performance of their duties.

5.3.8 Physical violence towards any other participant or spectator at an event.

5.3.9 Any action that may be considered unsportsmanlike.

5.4 Who May Be Penalized: Any organizer, entrant, driver, crew member, official, worker, guest of the above or MCSCC member may be penalized.

5.5 Imposition of Penalties

5.5.1 **Penalties**: The penalties in increasing order of severity:

5.5.1.1 Reprimand

5.5.1.2 Time, Lap or Position

5.5.1.3 Disqualification from competition/participation

5.5.1.4 Exclusion from competition/participation

5.5.1.5 Probation of competition/participation privileges

5.5.1.6 Suspension of competition/participation privileges

5.5.1.7 Fine

5.5.1.8 Loss of accrued points

5.5.1.9 Expulsion from the MCSCC

5.6 Multiple Penalties: Multiple penalties may be imposed. Consecutive penalties may be imposed (i.e. two 30 day suspensions, total 60 days; two months suspension and six months probation). Both suspension and probation, each for the maximum allowable term, may be imposed for a single violation.

5.7 Reprimand: A reprimand against an MCSCC driver shall be noted in his or her license file.

5.8 Time, Lap, Position: Penalties expressed as loss of time, loss of completed laps or loss of finishing position may be imposed.

5.9 Disqualification: Disqualification from competition may be imposed on an entrant, driver, or car.

5.10 Exclusion: Any Entrant, Driver, Participant or Vehicle may be excluded from a MCSCC sanctioned event.

5.11 Probation

5.11.1 Probation may be imposed for up to one year or as provided for in the Vintage Historic rules.

5.11.2 When a penalty of probation is imposed, the competitor shall immediately surrender his/her competition license to the Chief Steward of the Event.

5.11.3 The competitor shall be issued a letter of probation which shall serve as his/her competition license until the terms and conditions of the probation are satisfied.

5.11.4 The term of probation does not begin until the competitor surrenders his/her license.

5.11.5 Written notice of the probation along with documentation supporting the penalty or any changes to its terms before the expiration shall be sent to the MCSCC Competition Director within seven (7) days of the date of the penalty. Probations shall be recorded in the drivers file.

5.11.6 Probation may be reviewed before expiration by the Stewards Committee or by a committee appointed by the MCSCC Competition Director.

5.12 Suspension

5.12.1 Suspension of MCSCC competition and participation privileges may be imposed for up to one (1) year.

5.12.2 When a penalty of suspension is imposed, the competitor shall immediately surrender his/her Competition License to the Chief Steward of the event.

5.12.3 The suspension does not begin until the driver delivers his/her license(s) to the MCSCC. If the Competition License is not surrendered to the Chief Steward of the event, it shall be mailed to the MCSCC Competition Director with a consequent delay in the start date of the suspension.

5.12.4 Competitors may appeal any suspension at the next scheduled Board of Directors meeting.

5.13 Fine: A fine of up to $1000 may be imposed.

5.14 Loss of Accrued Points: Loss of accrued points may be imposed.

5.15 Expulsion: Expulsion from the MCSCC may be imposed as provided by the MCSCC bylaws.

5.16 Loss of Award: Any entrant or driver who is disqualified in any competition shall automatically forfeit all rights to awards in that competition.

5.17 Amendment of Results: When an entrant or driver is disqualified, the Event Chief Steward or SOM shall advance the subsequent competitors in the finishing order and advise the Chief of Timing and Scoring of any consequent amendment to the results.

5.18 Publication: The MCSCC shall have the right to publicize that any person, organization or car has been penalized and the reasons for the action. Any person or organization referred to in the notice or publication shall have no right of action against MCSCC or against any person publishing such notice or for its content.

5.19 Review of Penalties by the Chief Steward of the Event: Driver may request a review, by the SOMs of any penalty imposed by the Chief Steward of the Event, by notifying the Chief Steward of the Event within 30 minutes of the imposition of the penalty.

6. Championship Points System

6.1 Only Midwestern Council licensed drivers running in MC sanctioned events earn points towards an annual championship in each class. To be eligible for a championship:

6.1.1 The driver must have a current MC Competition License and entered the event with that license.

6.1.2 Must display three MC stickers on his/her vehicle, one on the front and one on each side.

6.1.3 Must have started at least five (5) MC points races during the year in their class, and finished at least three (3) races.

6.2 Points are awarded on the finishing position of the driver. Each driver may only count points from one less than the total number of sanctioned events during the season. (i.e., in a 10 race season, only points from nine (9) races may be counted.)

Finishing Position	**1st**	**2n**	**3rd**	**4th**	**5th**	**6th**	**7th**	**8th**	**9th**	**10th**	**11th & Down**
MCSCC Points Earned	**25**	**20**	**16**	**13**	**10**	**8**	**7**	**6**	**5**	**4**	**3**

6.3 Racers not otherwise earning points in the above schedule are awarded points as shown below. These are NOT in addition to any points earned above.

6.3.1 For entering event, passing tech and running practice and/or qualifying (DNS): 1 point

6.3.2 For starting the points race (DNF): 2 points

6.3.3 Drivers with more than one car in class, may only earn points for their highest finish in a given race.

6.4 The championship winner in each class is the eligible driver with the most points at the end of the season.

6.5 Ties in the end of the season standings shall be resolved by the following criteria in the following order:

6.5.1 Counting any dropped points finishes

6.5.2 Each driver's number of first place finishes; then if required second place finishes; third place finishes; etc., for each race the driver has participated (including a sanctioned points race in which the drivers points were dropped)

6.5.3 If a tie between drivers cannot be broken by the listed criteria they shall be considered tied in the final standings.

6.6 Only Midwestern Council license holders shall receive Council points, and they must enter each event with their MCSCC Competition license to be eligible to receive points for that event.

6.7 Co-Drivers in published co-driver races receive equal points to that of the driver.

6.7.1 To warrant points as a co-driver, the co-driver must complete a minimum of 25% of the race.

6.7.2 Co-drivers not eligible to earn points as specified in Section 6.6.1 shall be awarded points as specified in Section 6.3.

6.8 Only Midwestern Council licensed drivers running in MC sanctioned events are eligible for MC track record recognition. In order to receive track record status the driver must enter the event under his/her MC license.

6.8.1 No record shall be recognized as official by the MCSCC unless it is made in the presence of one or more qualified officials of the Club and time by a means approved by the Contest Board.

7. Race Starting Standards

7.1 In all MCSCC competitions, engines shall be started with a self-starter (operated by the driver in normal driving position) and an on-board power supply.

7.1.1 An auxiliary power supply may be used on the false grid. Push starts are authorized only in the pit lane on pit stops or red flags restarts with the exception of:

7.1.1.1 Drivers who have received the Chief Steward's prior permission may be allowed a push start on the false grid provided that the vehicle is in its assigned grid position no later than the one (1) minute warning. Drivers who have received the Chief Steward's permission for a push start must report to the grid prior to the grid closing. The grid workers will allow the vehicle to park in a position to facilitate the push start and movement to the assigned grid position. Any car push started on the false grid and not in compliance with the above, will start at the rear of the grid or from the pit lane at the discretion of the Chief Steward of the Event.

7.1.2 Any other method of starting the engine for a race or during competition is prohibited unless specified otherwise in the supplementary regulations for the event or classification in the GCR.

7.2 During the time a race is stopped due to a red flag, no service may be performed on the race cars which may be of competitive advantage, i.e., fueling, tire changes, oiling, securing body panels, replacing batteries, changing drivers, etc. Further, all work on vehicles in the pits must stop from the fall of the red flag until the green is displayed.

7.3 **Restarts**: If it has been necessary to stop a race, a restart may be accomplished by:

7.3.1 Restarting the cars in single file in the order in which they completed their last accurately scored lap,

OR

7.3.2 In the order they were originally started.

7.3.3 A pace car will be used on restarts.

7.4 **False Starts:** Should a driver improve his position prior to the start, or make a false start, and the race is started, that driver may be black-flagged and held in the pits or at the starting line for up to one (1) minute or otherwise penalized at the discretion of the Steward of the Event.

7.4.1 Any car that drops from its grid spot during the pace lap for any reason (mechanical, spin, on-track incident, etc) will rejoin the field at the back of the grid. Cars WILL NOT resume their original grid position.

7.5 **MCSCC Standard Start:** The following starting procedure is the suggested start for all Midwestern Council races:

7.5.1 The Grid Starter – Shall position him/herself at or near the start/finish line in the center of the track and face the field as it enters the track, indicating where the lead cars are to stop.

7.5.1.1 When the lead cars have stopped (as the rest of the field enters the track) the starter will brief the driver of the pole car.

7.5.1.2 When all of the cars have stopped the Starter will turn to the Steward who will give a final clearance.

7.5.1.3 The Starter will raise the furled yellow flag over his/her head as a signal to the drivers to raise their hands, indicating that their engines are running and that they are ready to start the pace lap.

7.5.1.4 When the Starter is satisfied that the competitors are ready, the Starter will lower the furled yellow flag and signal the pace car to begin the pace lap; signal the drivers to start the pace lap by waiving them on with the furled yellow flag and his/her free arm.

7.5.2 The Starter of the race shall at his discretion start the race using the following guidelines:

7.5.2.1 The green flag shall be hidden as the field approaches.

7.5.2.2 After the pace car has entered the pits and the starter in the pace car lowers the flag, the control of the field is transferred to the Starter of the race.

7.5.2.3 The field must be at a constant slow speed, well bunched and in line.

7.5.2.4 The field must be close enough so that all drivers can see the flags.

7.5.2.5 If the field is in good order, the Starter will suddenly and continuously wave the green flag. The race is underway the moment the green flag is waived.

7.6 If the field is NOT in good order the Starter will continue to keep the green flag hidden, shake his/her head from side to side, and slowly raise his/her arm as a signal to the drivers that it is a "no start". The flag stations should be advised to display their yellow flags all around the course. The cars will continue around for another slow pace lap.

7.7 Responsibility of the lead cars during the pace lap – As the key car in the field, the pole car is to stay as close to the pace car as is safely possible (so that field behind him/her will not have a tendency to spread out because of possible inconsistency in speed). The driver of the pole car will watch the pace car as it enters the pit lane, and remain to the rear of the pace car until the pace car flag is lowered, at which time he should direct his attention to the Starter of the race for the signal to start the race or go for another pace lap. The speed set by the pace car is to be maintained until the green flag is displayed. In the event of a "no start" the pole car driver will raise his arm as a signal to the cars behind that the race is not going to be started, and maintain the speed set by the pace car. The outside lead car will maintain the same speed and a parallel position with the pole car until the race is started.

8. Rules of the Pits

8.1 At every MCSCC event there shall be a place called the Pit Lane for the accommodation of each competing car's equipment, repairs, fueling, and attendants. At this place the car shall remain whenever the car is not actually in competition, with the exception of its retirement from competition, at which time it will be moved to the paddock, it possible. Any car which is removed voluntarily from the course or the pits must receive permission from the chief steward or designated representative before re-entering competition.

8.2 A car shall have no more than six attendants in the pits in addition to the driver or drivers, and this number may be decreased at any event at the discretion of the Chief Steward or Supplementary Regulations for that event.

8.3 At no time shall anyone but authorized attendants be in the pits. At no time shall anyone under 18 years (16 years with parental consent) of age be in the pit area. Minors holding an MPL are allowed in the pit area.

8.4 Unless the car is actually in the pit lane, no one shall be allowed over the guard rail or the pit wall except for one person for the purpose of signaling to the driver, and then only for the length of time needed to accomplish the actual signaling operation.

8.5 Pit crews are, at all times, under the control of the Pit Stewards appointed by the Chief Steward.

8.6 No smoking in the pits.

8.7 Cars called in for on a mechanical black flag shall be inspected and approved by a steward or his appointee before returning to the track. Fluids may be added only with the approval of the inspecting steward.

9. Rules of the Road

9.1 Flags – The following flag signals shall be obeyed without question:

9.1.1 **GREEN**: A race is under way at the instant green flag falls. This flag shall normally be in possession of the Chief Starter only, and will not ordinarily be shown at the flag stations around the course. When displayed, the green flag indicates that the course is clear.

9.1.2 **YELLOW**: Stationary – Take care, Danger, NO PASSING from the flag station until past the incident and in sight of the next manned clear flag station. Car must be under control. *Waved* – Take Great Care, Great Danger, BE PREPARED TO STOP, NO PASSING, from the flag station until past the incident and in sight of the *next manned* clear flag station. Car must be under control.

9.1.3 **RED**: Stop racing *IMMEDIATELY!* Clear the circuit as well as circumstances permit. The race has been stopped. The red flag can be displayed only at the start/finish line. Simultaneously, a *waving yellow flag and waving black flag* will be displayed at each flag station. This is to inform all drivers that they must stop racing immediately and proceed to their pits, exercising extreme caution and being prepared to stop. Should the driver encounter a RED FLAG, it is the ***driver's responsibility*** to come to an immediate and controlled stop with regard to other drivers.

9.1.4 **BLUE WITH DIAGONAL YELLOW STRIPE**: *Motionless* – Another competitor is following you very closely. *Waved* – You are being overtaken by a much faster competitor. *Accompanied with a Furled Black* – You are blocking the competitor behind you. Give way.

9.1.5 **YELLOW WITH VERTICAL RED STRIPES**: Take care. Oil or foreign substance has been spilled and/or a slippery or dangerous condition exists somewhere on the road.

9.1.6 **WHITE**: A slow-moving vehicle is ahead. Take care. (It may be an ambulance, a service vehicle or a slow-moving race car with a mechanical problem.) You may pass this vehicle.

9.1.7 **BLACK**: Complete the lap you are now on. Then *stop for consultation* at the location designated by the Chief Steward of the Supplementary Regulations for that event. Furled Black: Warning, you are driving in an unsafe or improper manner. If continued, you will be given a black flag.

9.1.8 **BLACK WITH ORANGE BALL IN CENTER**: There is something mechanically wrong with your car. Proceed to your pits at reduced speed.

9.1.9 **CHECKERED**: You have finished the race (or practice session). Complete one more lap cautiously before stopping.

9.2 AMB TransX 260 transponders are required for all wheel-to-wheel entries. The grid will be arranged with the fastest cars in front and the slowest cars in the rear based upon the electronically gathered lap times during a qualifying session.

9.3 To be considered a starter, a car must be in position on the starting grid, and be prepared in all respects to compete in the event at the instant the signal is given to start. Cars entering the race after the initial start are also considered starters.

9.4 To be considered a finisher, a driver must complete one-half of the laps of the overall winner of the race. If the length is an uneven number of laps, divide the overall winner's laps by two and round down to the nearest whole integer.

9.5 In the event that a driver desires to pass another, but is unable to do so because the overtaken car occupies too much of the road, the overtaking driver shall point to the car ahead. At his/her discretion the Starter or other qualified flag official will display

to the car to be overtaken a waving blue flag. The driver of the overtaken car is obliged to pull to the side, making room for the overtaking car to pass. If that driver still fails to give way, he/she will be black-flagged.

9.6 The responsibility for the decision to pass another car rests with the overtaking driver. However, this will not relieve the overtaken driver from responsibility for the safe passing of the other car. Any driver who fails to make use of his/her rear view mirror, or who appears to be blocking another car seeking to pass, may be black flagged.

9.6.1 Blocking is defined as making more than one move, left or right, to impede an overtaking car. When reported, you will receive a blocking flag from the Starter. The Blocking flag from the starter stand is the display of a Waved Blue Flag accompanied by a Furled (Closed) Black Flag. If you continue to be reported to be blocking, you will be issued a Black Flag.

9.7 Hand Signals

9.7.1 Before entering the pits from the course, the driver should signal by raising one arm straight upward.

9.7.2 An overtaken driver should point to the side on which an overtaking driver should pass.

9.7.3 The driver of a car stopped on or off the course shall raise both arms to indicate that he/she will not move until directed by the Corner Captain. After recognition by the Corner Crew, the driver will hold up both arms if unable to move or raise one arm to indicate readiness to return to the track.

9.7.4 When leaving the pit lane a driver will indicate direction of intention by pointing either to the paddock or the track.

9.8 Whenever a driver leaves on an airport circuit with all four wheels, he/she must re-enter the course at the same spot where he/she went off, and cannot simply re-enter further down the course, except when moved by a safety vehicle to a point of greater safety.

9.9 During an event it is expressly forbidden to drive or tow a car at any time or under any conditions in a direction opposite to that in which the event is being run without the specific approval of the Chief Steward. Infraction of this rule may mean immediate disqualification.

9.10 Should a pit-bound driver overshoot his pit, the car must either be pushed back into the pit by hand, or else continue for another lap. No car may be pushed back to the pit under conditions which would constitute a hazard.

9.11 If, for any reason, a driver is forced to stop his/her car on the course during an event, it should be his/her first duty to place his/her car in such a manner as to cause no danger or obstruction to other competitors. All disabled vehicles deemed to be in an unsafe position shall be moved to a point of greater safety by the most safe and expedient route, unless otherwise requested by the driver.

9.12 Drivers may obtain no assistance during the race other than from their pit crews and in the pits. This does not preclude assistance by race officials for safety reasons.

9.13 Cars may not be pushed while on the course, except to remove them from a hazardous position to one of greater safety.

9.14 Refueling – During a race, refueling must be done only in the pits unless otherwise stated in the Supplemental Regulations, with engine off and the driver out of the car. A crew member must stand by with a ready fire extinguisher. All crew involved in refueling the car must be wearing long pants, shirts, closed shoes, a balaclava and eye protection. The person holding the fueling rig must wear flame retardant clothing similar to that of the driver in addition to the balaclava and eye protection.

9.15 A vehicle and driver involved in a rollover may not complete that practice or race session.

9.16 When linked to a service vehicle by a towrope around the roll bar, a driver of a towed car must wear a helmet and gloves, and the lap belt must be securely fastened.

Safety Equipment

All drivers of automobiles competing in MCSCC sanctioned speed events, including practice, shall be equipped as follows:

1. Equipment Condition
The following equipment shall be in good condition and free of defects, holes, cracks, frays, etc.

2. Helmets

2.1 Helmets shall be approved by the Snell Foundation and carry the most current issued Snell Special Application (SA) sticker/decal or the previous issued Snell Special Application sticker/decals (e.g. If the most current Snell Special Application rating is SA2020, helmets with the SA2020 and SA2015 Snell sticker/decal may be used). The most current Snell Foundation Special Application rating will become effective on January 1st of the following year, after helmets are readily available for retail sale. SFI rated helmets (rated 31.1) or FIA Standard 8860-2004 or later are also acceptable.

2.2 The back of each driver's helmet shall be labeled with a minimum of the driver's name and date of birth.

2.3 Head and neck supports are required for all competitors, e.g. H*ANS* Device. All head and neck restraints will be certified to the following standards: SFI 38.1, FIA 8858-2002, or FIA 8858-2010. The appropriate label will be attached to the unit.

3. Eye and Face Protection
Drivers of open cars shall wear goggles or face shields of impact resistant materials. It is highly recommended that drivers equip themselves with full coverage (full face) helmets.

4. Balaclavas
Drivers with facial hair, beards, and mustaches will wear a fire resistant balaclava, and wear it properly to cover said facial hair. Drivers with an open face helmet shall wear a fire resistant balaclava. Additionally any hair below (outside) of the helmet must be completely covered. Full helmet skirts are an acceptable option to the balaclava.

5. Driver's Suits
Driving suits that effectively cover the body from the neck to the ankles and wrists are required. One piece suits are highly recommended. All drivers suits will be worn with full length underwear unless noted below. It is recommended that underwear be worn under all suits.

APPROVED SUIT RATINGS:

SFI 3.2A/1 or 3.4/1 (minimum)	Underwear **Required**
SFI 3.2A/5 or 3.4/5	Underwear Optional
SFI 3.2A/10 or 3.4/10	Underwear Optional
SFI 3.2A/15 or 3.4/15	Underwear Optional
SFI 3.2A/20 or 3.4/20	Underwear Optional
FIA 1986 Standard	Underwear Optional
FIA Standard 8856	Underwear Optional

6. Gloves/Shoes
Drivers must wear SFI or FIA approved gloves. Shoes must have uppers made of leather or a nonflammable material and may have ventilation pinholes if part of original manufacture. SFI or FIA approved shoes are recommended.

7. Driver Restraint Equipment

7.1 Belts

7.1.1 All vehicles in MCSCC sanctioned competitive events must be equipped with seat belt, shoulder harness, and antisubmarine belt(s) meeting the following specifications: SFI 16.1, SFI 16.5, FIA 8853/98, or FIA 8854/98. Seat belt, shoulder harness, and anti-submarine belt installation is subject to approval of the Chief Technical Inspector.

7.1.2 A minimum of a five point system is required on all cars.

7.1.3 It is recommended that all belts be attached to the chassis or rollcage. Where this is not possible, large diameter washers shall be used to spread to load.

7.1.4 Minimum hardware requirements for mounting of seats or harness is SAE grade 5, 3/8" diameter.

7.1.5 Clip in belts are permitted. Eyelets used with clip in belts shall be of the forged type.

7.1.6 Five point harness systems may be used, however, a six (6) or seven (7) point system is highly recommended for use in vehicles where the driver is seated in a semi-reclining position. A harness system shall consist of a two inch (2") or three inch (3") lap belt and two (2) two inch (2") or three inch (3") over the shoulder type of shoulder harness and one or two (2") inch leg or anti-submarine straps.

7.1.7 The buckles shall be of metal-to-metal quick release type except in the case of leg straps of the six point system where they attach to the seat belt or shoulder harness straps.

7.2 Shoulder Harness

7.2.1 There must be a single release common to the seat belt and shoulder harness.

7.2.2 The shoulder harness shall be mounted behind the driver and between a line drawn downward 5 degrees and upward 30 degrees from the shoulder.

7.2.3 A shoulder harness consisting of two separate straps must be used (Y-type shoulder harnesses are not permitted). Either separate mounting points or a common mounting point may be used. If a common mounting point is used, it must be at least 6 inches behind the back of the driver's neck. If the mounting point is more than 6 inches behind the back of the driver's neck, an H-type configuration must be used.

7.2.4 In single seat cars and those with special bucket seats providing lateral support for the chest and upper torso, mounting points may be directly behind the seat back.

7.2.4.1 Measurement of the above distances is along the shoulder strap and not the horizontal distance between the front of the seat back and the anchor point.

7.3 Anti-Submarine Belt

7.3.1 The single anti-submarine strap of the five point system shall be attached to the floor structure and behind the front of the seat and have metal-to-metal connection with the single release common to the seat belt and shoulder harness.

7.3.2 The double strap of the six point system may be attached to the floor as above for the five point system or be attached to the seat belt so that the driver sits on them, passing them up between their legs and attaching either to the single release common to the seat belt and shoulder harness or attaching to the shoulder harness straps. It is also permissible for the leg straps to be secured at a point common to the seat belt attachment structure, passing under the driver and up between their legs to the seat belt release or shoulder harness strap.

7.4 Certification and life span

7.4.1 Driver restraint systems meeting FIA 8853-2016 or 8854/98 certification shall on December 31st of the printed expiration year.

7.4.2 Driver restraint systems meeting SFI 16.1 and SFI 16.5 certifications above must have a label/tag showing the particular certification they do conform to along with the date of manufacture. Such systems shall expire on December 31st of the fifth (5th) year after the manufacture date. SFI belts/harnesses with an expiration date will expire on December 31st of the printed expiration date. The restraint system needs only one (1) date label.

7.4.3 All driver restraint systems shall be in good working condition. Belts may be failed by technical inspection if they show signs of stress or undue wear regardless of date.

7.5 Arm Restraints/Window Nets

7.5.1 Drivers of open cars must use arm restraints. Drivers of closed cars in the Vintage/Historic, Improved Touring, and Street Tuner classes must use either a window net or arm restraints. All other drivers of closed cars must use a window net.

7.5.2 Arm restraints are to be worn in such a manner as to prevent the driver's hands from being extended over the head when seated normally in the car.

7.5.3 Window nets must be securely mounted to the structure of the car with a quick release mechanism. Window nets may NOT be mounted to the door. It is recommended that window nets release from the top. Plastic or rubber mounting components are prohibited.

7.6 Emergency Exit Time

7.6.1 Drivers should be able to exit their vehicle quickly in an emergency event. Drivers should be tested from time to time to ensure they meet this requirement. A driver must demonstrate their ability to exit the vehicle, unassisted, in a timely manner. The driver must be wearing all of the required gear and be tightly belted into the driver's seat when the timing begins.

Automobiles – General Regulations

1. Eligibility

To compete in an MCSCC sanctioned event, cars shall meet the following requirements as well as the specifications of the class and category in which they are entered.

2. Fuel

All cars shall use gasoline. Gasoline may contain ethanol, anti-oxidants, metal deactivators, corrosion inhibitors, and lead alkali compounds such as tetra-ethyl lead. Other oxygen and/or nitrogen bearing additives are prohibited.

3. Identification Marks

3.1 Each automobile shall carry identification numbers, class letters, or other marks required by the Supplementary Regulations.

3.2 Numbers shall be placed on the front and both sides of each automobile so that they are acceptable to the Chief of Timing and Scoring. Metallic numbers and letters are not allowed.

3.3 It is recommended but not required that all cars except formula cars have a legible rear number.

3.4 Numbers used shall be restricted to one of two digits, or three digits with the first digit being number one (1), and shall meet the approval of the Chief of Timing and Scoring. Numbers used in Vintage Historic shall allow one, two, or three digits, and must meet the approval of the Chief of Timing and Scoring.

3.4.1 All automobiles are to carry numbers at least eight inches high with 1-1/2" stroke on a contrasting background.

3.5 Class letters a minimum of 4 inches high with a 1" stroke must be on both sides of the car. Cars racing in classes where there are variable weights are applicable to the same class shall post adjacent to the car classification for the minimum race weight of that car as prepared. The markings will be contrasting and plainly visible from the impound scale operators work table. The markings must not confuse the class designation markings.

3.6 Novice license holders will identify their cars with an "**X**" on front, rear, and both sides, six inches high with a ¾" stroke and not in line with the numbers.

3.7 Novice Drivers under observation must carry "**Ӿ**", an "**X**" with a horizontal bar superimposed.

3.8 All cars shall have three (3) Midwestern Council stickers applied to a prominent position on each side and the front of the car.

4. Advertisements on Automobiles

Advertising, names and symbols may be displayed on cars provided they are in good taste, and do not interfere with identification marks.

5. Mechanical Conditions of Automobiles

5.1 The Chief Technical and Safety Inspector shall have the responsibility for inspecting and certifying every automobile before it is allowed to take part in any on track activity.

5.2 An automobile which is disapproved, or which is driven in competition, or which is presented for reinspection without the corrections specified by the Chief Technical and Safety Inspector, may be disqualified from the event.

5.3 Automobiles which have been altered or damaged after they have been approved at Technical and Safety Inspection shall be subject to reinspection and approval. In the case of an automobile suffering chassis or suspension damage sufficiently sever as to prevent continued participation in the event, a notation of the damage shall be entered in the Vehicle Log Book.

5.4 All major body components such as front and rear hoods, fenders, doors and wind screen must be maintained in normal position throughout the competitions.

6. Weight and Track

6.1 All cars must meet or exceed the minimum weight specified (where applicable), exactly as they come off the race circuit at the conclusion of a race or qualifying session.

6.1.1 Platform scales or individual scales that weigh one axle (two wheels) at a time are acceptable. The scales must be certified. The scales at the vent are the official scales for that event and they must be available to competitors during the entire event.

6.2 Ballast may be added to all cars as required to meet minimum weight, provided it is securely mounted within the coachwork (body work) and serves no other purpose.

6.3 Track is defined as: The distance between the centerline of the tire treads as races, but without driver, measured at a horizontal plane through the wheel hub centerline, and is to be measured as follows: From centerline to centerline on the tire tread. Alternately, it may be measured from the inside of one tire sidewall to the outside of the other sidewall, than conversely, from outside sidewall of the first tire to the inside sidewall of the other tire. The two dimensions obtained to be added together and divided by 2 to obtain the average. Measurements to be taken at both front and rear of tires and averaged to compensate for toe-in/out.

7. Technical and Safety Inspection

7.1 In order to enter the race course at any time during an event, a vehicle shall display a Tech Sticker signifying successful completion of Technical and Safety Inspection as prescribed in following sections. Passing safety inspection and receiving a Tech Sticker is an indication that the vehicle is safe to go on course. It is not a certification of legality.

7.1.1 To be issued a MCSSCC log book, the intended automobile must be presented to the Chief of Tech (or his/her designee) by the owner or owner's representative for inspection for safety and compliance with class rules for the intended race class. The person presenting the automobile shall have in their possession copies of the rules pertaining to the automobile and be able to answer the inspectors questions regarding the fitness for racing and the applicable class requested. Upon a successful inspection, a log book will be issued for the automobile for the intended racing class

7.1.2 Automobiles racing in more than one class must show compliance with the rules for each class and will have those classes listed by the inspector in the log book.

7.2 Re-inspection and Logbooks

7.2.1 A vehicle shall be re-inspected if damage or deficiencies from the car's previous event(s) are noted in the logbook. No car shall be allowed to compete in subsequent events until noted damage or deficiencies are corrected. Inspection above the minimum level may be performed on a vehicle whose logbook indicates no competition for three (3) months or more during the current competition year.

7.3 A vehicle logbook must be complete and unmodified, with the original staples and all original pages. Continuation logbooks are to be marked with the date and number of the original of the car.

7.4 Competition vehicles with logbooks issued by other sanctioning bodies (i.e. SCCA, VSCDA, etc.) must present all logbooks at any technical inspection.

8. Suitability for Competition

8.1 The basic design of the car shall be suitable for high performance with safety.

8.2 The Chief Technical Inspector will report to the Chief Steward of Event any automobiles that he/she finds do not conform with the requirements of the GCR.

8.3 Approval of any vehicle by the MCSCC tech inspector shall mean only that the automobile is approved for participation in that event in which it has been entered. Such approval shall not be construed in any way to mean that the inspected automobile is guaranteed to be mechanically sound. It is further understood that the MCSCC Inspector, Event Chief Steward, MCSCC Competition Director, nor any official to the event, Sponsoring Club, or sanctioning body shall be held liable for any losses, injury or deaths resulting from a mechanical failure of an inspected automobile.

9. Annual Inspection

9.1 A full and complete Technical and Safety Inspection shall be performed on each car once a year, or as required by the supplemental regulations. The car shall be presented in a race ready (or as raced) condition. If the car passes Tech, the logbook shall be stamped with the official MCSCC "Annual Inspection" stamp, dated and signed.

9.2 Minimum Inspection for each event thereafter shall consist of reviewing the driver's personal gear and the Vehicle Logbook. If these are in order, a Tech sticker shall be issued.

9.3 The points covered at technical and safety inspection shall be:

9.3.1 **Identification Marks** – All required identification marks as listed in Automobiles – General Section 3, shall be in place.

9.3.2 **Appearance** – Neat and clean. Specifically automobiles that are dirty either externally or in the engine and passenger compartments, or that show body work damage, or that are partially or totally in primer, or that do not bear the prescribed identification marks shall not be approved for competition.

9.3.3 **Classification** – Verification of Year, Make, and Model of car for class entered.

9.3.4 **Tires** - Tires shall be new or very good. Racing tires or tires that meet or exceed a DOT V rating shall be required on all cars except those classes that have a specified tire (e.g. Club Formula Ford).

9.3.5 **Brakes** – Shall be pedal-operated, working directly on each wheel, and in perfect working order. Rolling brake tests are permissible, but wheel need not lock up.

9.3.6 Bodywork

9.3.6.1 Shall be securely mounted.

9.3.6.2 Fender skirts and wheel trim (hub caps etc.) shall be removed.

9.3.6.3 All cars shall compete with both front windows in the down position.

9.3.6.4 Windows must be transparent, be free of aftermarket tinting, and have no cracks. Banners across the top of front or rear windows are permitted so long as they do not interfere with the driver's field of vision.

9.3.7 **Exhaust System** – Shall be directed away from the body or chassis and terminate behind the driver for all cars except GT category cars, using GT exhaust rules.

9.3.8 **Under Hood and Engine Compartment** – All hoses, wires, etc. shall be securely fastened. Breather tanks shall be of proper size and design to prevent spillage. No visible signs of leakage.

9.3.9 **Suspension and Steering** - Shall be of suitable design and in perfect condition. All Heim-type spherical rod ends on major suspension and steering components must be retained either by the design of the mounting brackets or by a larger area captive washer or by the inherent mechanical design of the unit (Circlip or Messerschmidt joints). No play/ looseness of any suspension component or wheel bearings is permitted.

9.3.10 Fuel Tanks

9.3.10.1 No leakage of fuel will be tolerated.

9.3.10.2 "Monza"/flip type fuel filler caps are prohibited.

9.3.10.3 Replacement of production fuel tanks by safety fuel cells conforming to the standards specified in **Appendix X** is highly recommended.

9.3.10.4 Fuel tank mounting fasteners and/or straps must be inherently non-elastic.

9.3.10.5 Aircraft/industrial hose and fittings are highly recommended on all fuel and oil systems. Fluid carrying lines within the drivers compartment shall meet FIA, EASA or FAA/PMA certifications.

9.3.10.6 A port/hose may be added for the sole purpose of sampling the fuel from any competition vehicle.

9.3.11 Brake Lights

9.3.11.1 Except for Formula cars, all cars shall have operating brake lights.

9.3.11.2 All forward facing lights must be taped to prevent loss of glass or plastic pieces in case of damage. It is recommended that all lights be taped.

9.3.11.3 All formula cars shall as of 2013 be fitted with a high intensity LED rain light, flashing or steady such as those in FIA List 19, which must be mounted as high as possible on the centerline of the car and be clearly visible from the rear.

9.3.11.4 The rain light must be switched on when so ordered by the Chief Steward of the Event.

9.3.12 Driver Restraints – All specifications of section 9 of the "Safety" section must be met.

9.3.13 Seats- Seats must be securely mounted. All seat backs must be securely bolted, braced or strapped to prevent rearward collapse/movement. Seats homologated to and mounted per FIA standard 8855-1999 need not utilize a seat back brace. Homologation labels must be visible.

9.3.14 Roll Bars/Cage – Each car shall be equipped with a roll/bar cage as required by class rules. Roll bars will meet Appendix Z. Roll cages (Appendix ZZ) are highly recommended.

9.3.15 Tonneau Covers - Covers may not cover the passenger seats but may cover the convertible top and boot.

9.3.16 Fire Wall and Floor – Shall prevent the passage of flame and debris to the driver's compartment. Belly pans shall be ventilated to prevent the accumulation of liquids.

9.3.17 Mirrors – Shall provide driver visibility to the rear of both sides of the car.

9.3.18 Fire Suppression

9.3.18.1 All cars shall be equipped with a means of fire suppression. All cars except GT category cars may use a hand-held fire extinguisher or an on-board fire suppression system or both. GT category cars shall be equipped with an on-board fire suppression system. On-board fire suppression systems are highly recommended in all cars.

9.3.18.2 Handheld Fire Extinguishers ("Extinguishers) Handheld fire extinguishers are allowed in all cars except GT category cars.

9.3.18.2.1 Extinguishers shall be securely mounted using quick-release type metal mounting brackets. Formula category cars may mount the extinguisher in an accessible location outside the cockpit. All other cars shall mount the extinguisher inside the cockpit.

9.3.18.2.2 Handheld fire extinguishers of three (3) types are allowed.

9.3.18.2.2.1 Halon (1301 or 1211) and CEA614 extinguishers shall have a minimum capacity of 2 pounds by weight.

9.3.18.2.2.2 Dry chemical extinguishers shall have a minimum capacity of 2 pounds by weight and shall carry a 10BC Underwriters Laboratory rating.

9.3.18.2.2.3 AFFF or equivalent surfactant foam (SPA Lite, OMP Ecolife, Lifeline Zero 2000, etc) extinguishers shall have a minimum capacity of 1.25 liters by volume. AFFF extinguishers shall be serviced according to manufacturer recommendations.

9.3.18.3 On Board Fire Suppression Systems ("Fire Systems") On-board fire suppression systems are highly recommended for all cars and are required in GT category cars.

9.3.18.3.1 The fire system bottle shall be securely mounted in such a way that it can be removed for service, inspection, and weighing. Location is unrestricted.

9.3.18.3.2 Fire system actuation may be by mechanical or electrical means. The actuation mechanism shall be in reach of the driver when the driver is restrained in the car.

9.3.18.3.3 On-board fire systems of two types are allowed.

9.3.18.3.3.1 Halon (1301 or 1211) and CEA614 systems shall have a minimum capacity of 5 pounds by weight (10 pounds minimum for GT-1 class cars).

9.3.18.3.3.2 AFFF or equivalent surfactant foam (SPA Lite, OMP Ecolife, ZERO 2000, Coldfire 302, etc) systems shall have a minimum capacity of 2.25 liters by volume (3.37 liters for GT-1 class cars). AFFF fire systems shall be serviced according to manufacturer recommendations.

9.3.18.3.3.3 Pressurized fire systems shall have a functional pressure gauge indicating that the bottle is pressurized to manufacturer specifications. Non-pressurized CO2 propelled fire systems are allowed providing that the seal of the CO2 cartridge is intact and the bottle weight is equal to that specified by the manufacturer. Tech inspection may require competitors to weigh their bottles to prove that they are filled to the proper capacity.

9.3.18.3.3.4 Fire systems shall use a minimum of two (2) discharge nozzles: at least one nozzle in the cockpit and at least one (1) nozzle in the engine or fuel cell compartment. Fire systems shall use the appropriate type of nozzles (e.g. Halon fan-spray type AFFF atomizing type) and shall not exceed the number of nozzles recommended by the manufacturer.

9.3.18.3.3.5 All safety pins shall be removed from the actuating mechanism and firing head of mechanically actuated fire systems shall be switched to the "armed" position whenever the car is on track.

9.3.18.4 Markings

9.3.18.4.1 The location of the fire extinguisher or fire system actuation mechanism shall be marked with a red circle "E" at least 2 inches in diameter. Closed cars may need to use two such decals: one at the extinguisher or actuation mechanism, and one outside the cockpit as close as possible to the extinguisher or actuation mechanism.

9.3.19 Flame-Resistant Garments, Crash Helmets, Goggles, or Face Shields – Shall be approved at safety inspection and may also be checked upon the starting grid. (See "Safety Equipment".)

9.3.20 Scatter Shields

9.3.20.1 The installation of Scatter Shields or explosion-proof bell housings shall be required on all cars where the failure of the clutch or flywheel could create a hazard to the driver.

9.3.20.2 Chain driven cars shall have chain guards suitable to protect the driver, competitors, and spectators in case of chain breakage.

9.3.21 Targa Tops, Sunroofs, Convertible Tops

9.3.21.1 Cars with factory Targa Tops (Fiat X 1/9, Porsche 914, Corvette, etc.) shall be considered open cars if top is removed.

9.3.21.2 If top is retained, the cars shall be considered closed cars and the tops must be securely fastened (welded, bolted, etc).

9.3.21.3 Removable sun rood/ T-top panels may be removed or must be securely fastened (welded, bolted, etc.).

9.3.21.4 Detachable fabric doors must be removed

9.3.21.5 Fully detachable hardtops must be removed unless securely fastened (welded, bolted, etc.).

9.3.21.6 If the fully removable hardtop is securely fastened, the car shall be considered closed.

9.3.22 Leakage, Filler Caps, Catch Tanks

9.3.22.1 No leakage of any fluid will be tolerated.

9.3.22.2 All filler caps or plugs must be leak tight.

9.3.22.3 All engine crankcase breathers, whether directly or indirectly ventilating the crankcase, shall be equipped with oil catch tanks. All radiators or expansion systems shall have a catch tank.

9.3.22.4 All transmission and differential breathers are recommended to be equipped with catch tanks. These catch tanks shall not be located in the driver/passenger compartment.

9.3.23 Master Switch

9.3.23.1 All cars, except Improved Touring, must be equipped with a general circuit breaker (master switch) easily accessible from outside the car. The master switch should be installed directly in either battery cable and shall cut all electrical circuits (ignition, fuel pumps, lighters, alternator, etc.) but not an on-board fire extinguisher. It shall be clearly marked by the international marking of a spark and blue triangle mounted in a standard location with the "OFF" position clearly indicated.

9.3.23.2 The standard locations will be as follows:

9.3.23.2.1 Formula and Open Sports Racing Cars – In close proximity to the right hand upright member of the roll bar, but in a location so that it cannot be operated accidentally. It can be mounted on a bracket welded to the inside of the upright member or mounted so that the operating lever or knob is outside of the body panel immediately inboard of the upright member. This is the standard location on Formula cars built to the Constructors Association's requirements for Formula 1.

9.3.23.2.2 Closed Sports Racers, Production based cars – open or closed May choose one of the following locations:

9.3.23.2.2.1 In front of the windshield on either the cowl or on top of the fender, but close enough to the windshield to be accessible if the car is overturned.

9.3.23.2.2.2 Mounted below the center of the rear window.

9.3.23.2.2.3 On a bracket welded or clamped to the roll cage or dash in a position accessible from outside the car.

9.3.24 Steering Wheels

9.3.24.1 Wood rimmed steering wheels are prohibited.

9.3.24.2 Steering wheel lock mechanisms may be removed/disabled on all cars. This may be required in some classes.

9.3.25 Fuel Tank Vents – Fuel tank evaporative emission control devices must be removed from all classes of cars.

9.3.26 Plumbing – Header tanks and water lines must not be exposed to the driver. Chassis, frame or roll bar tubes shall not be used for storage, transfer or venting of fuel.

9.3.27 Window Net – All drivers of open cars shall use arm restraints. It is recommended that all closed cars be equipped with window nets. In lieu of window nets, drivers of closed cars may use arm restraints.

9.3.28 Factory Recalls – Factory recalls involving safety shall be observed. Other categories shall meet or exceed refit standards within preparation rules for their category.

9.3.29 Engine Coolant – The use of anti-freeze (ethylene glycol) in all liquid cooled cars shall be in no greater concentration than 20% (twenty percent) in the cooling system. Wetting agents and pump lubes are allowed. The use of water and no anit-freeze, with or without wetting agents/pump lube, is preferred.

9.3.30 Tow Eye

9.3.30.1 All cars without an exposed roll bar shall have a towing eye or strap, front and rear that does not dangerously protrude from the body work when the car is racing, to be used for flat-towing or hauling the vehicle. The required tow eyes must be strong enough to tow the car from a hazard such as a gravel trap. Front tow eyes may be mounted in the driver/passenger window opening, or any location forward of the windshield. If mounted in the driver/passenger side window openings, it must be attached to the forward roll cage down tube as close to the base of the windshield as possible. If the front tow eye is located in the side window openings there shall be one on each side of the vehicle. Rear tow eyes must be accessible rearward of the rear axle centerline.

9.3.30.2 A removable towing eye carried inside the vehicle is not acceptable, except formula and sports racers. These towing eyes or straps shall be easily accessible without removal or manipulation of the body work or other panels.

10. Classification of Non-Standard Vehicles

10.1 The Contest Board may from time to time consider the addition to the GT, Production, and Improved Touring categories (and any successor, production vehicle based categories) of vehicles in configurations or combinations of components that were never produced by the manufacturer. Said listing shall be subject to the following procedure:

10.1.1 Petitioner must submit a complete set of specifications (chassis, running gear and drive train) for the proposed vehicle along with a $100.00 Publication Fee. This fee will be returned if the Board does not accept the Petitioner's request.

10.1.2 If accepted by the Contest Board, the specifications will be listed on a separate page in the relevant category's Specification Booklet for the term of the listing. Upon acceptance, they will also be published in the Klaxon newsletter.

10.1.3 The term of the listing shall be five (5) years, including the initial year. Said term shall be clearly noted in the vehicle listing. The listing may be renewed at five year intervals by:

10.1.3.1 Written request of the original or subsequent petitioner

10.1.3.2 Payment of the publication fee

10.1.3.3 Acceptance of the Contest Board

Note: While the Contest Board accepts any non-standard listing in good faith, it reserves the right to change various specifications in the listing, or the class of the listing itself, at any time, subject to its normal procedures.

Stock Categories

Spec Miata

1. GCR

1.1 All automobiles must comply to GCR ***Automobiles – General Regulations***.

2. Purpose and Intent

The Spec Miata (SM) class is intended to provide the membership with the opportunity to compete in low cost, production-based cars with limited modifications, suitable for racing competition. The vehicle identification number (VIN) shall correspond with the model/year automobile classified. VIN plates or stampings shall remain in place. There must be at least one VIN plate or stamping on the dashboard or chassis that corresponds with the model year automobile classified.

3. Classification and Weight

3.1	1990-1993 Mazda Miata 1597 cc	2275 lbs
3.2	1994-1997 Mazda Miata 1839 cc	2400 lbs
3.3	1999-2000 Mazda Miata 1839 cc	2400 lbs
3.4	2001-2005 Mazda Miata 1839 cc	2450 lbs

All vehicles shall be weighed with driver as raced.

4. Authorized Modifications

The following items represent the only modifications and safety items permitted and/or required on Spec Miata automobiles other than safety items as required in the General Regulations section of this GCR. All cars must install a roll cage in accordance with Appendix ZZ of the GCR. Roll bars and roll cages must be bolted, or welded, into the automobile and shall be contained entirely within the driver/passenger compartment.

4.1 Engine

4.1.1 Block

4.1.1.1 The engine block may be decked/milled to achieve the factory specified compression for the correct model year as listed. Honing of cylinders is permitted to a maximum standard diameter as shown in the following table:

Year	Dimension
90-93	3.076”
94-05	3.273”

4.1.1.2 The cylinders may be bored .010” over to a maximum overbore diameter shown in the following table:

Year	Dimension
90-93	3.086”
94-05	3.283”

4.1.1.3 If one or more of the cylinder(s) is over-bored or exceeds the maximum standard diameter specified in paragraph 1, the vehicle shall meet the “minimum weight with over-bored motor”.

4.1.2 Crankshaft

4.1.2.1 The stock Mazda Miata crankshaft must be used with no modifications except for machining to allow the use of main and rod bearings as allowed in 4.1.2.2 below. Shot peening to stress relieve the crankshaft after machining is permitted.. The following table lists the permitted crankshaft for each model year and the minimum weight (not including the pilot bearing and hardware).

Model Year	Part Number	Minimum Weight
90-93 (short nose)	B617-11-300	26.5 Lbs
90-93 (long nose)	B6s7-11-300A	26.5 Lbs
94-05	BP06-11-300D	35.6 Lbs

4.1.2.2 Main and rod bearings must not be modified in anyway. OEM and non-OEM bearings must be used from within the standard range, as allowed by the Mazda factory service manual. the crank trigger must not be altered or modified in any way. The crank pulley/balancer must not be altered or modified in any way.

4.1.3 Connecting Rods

4.1.3.1 Mazda part number B6S7-11-210E must be used. minimum connecting rod weight with cap, and bolts is 537 grams.

4.1.4 Pistons

4.1.4.1 Mazda OEM pistons must be used, and may not be altered in any way.

4.1.4.2 Mazda OEM piston rings must be used, and may not be altered. Modification of the piston ring end gap width is allowed

4.1.5 Cylinder Head

4.1.5.1 The cylinder head must not be ported, polished, or machined in any way. The original casting must not be modified in any way unless specified below. The gasket face of the cylinder head may be resurfaced provided the maximum compression ratio is not exceeded and the minimum height of the cylinder head is maintained. The minimum height is 5.235”.

4.1.5.2 The throat area of the port consists of the 90 degree angle at the very bottom of the cast steel valve seat as it transitions to the aluminum casting below. It is permitted to plunge cut the throats in order to correct for core shift that is found in many cylinder heads. This cut must be cylindrical and concentric to the valve guide axial

centerline, within a tolerance of .005", for the entire length of the cut. The radius tangent to the cylindrical and bottom surfaces shall not exceed 0.375". This cut cannot extend further than the specified number listed below from the bottom of the ferrous valve seat. There can be no tooling or machining marks in the head below this point. The intersection of the machined surface of the plunge cut to the port casting shall not be altered, except that the area under the short turn radius may be de-burred, with the de-burring not to exceed 1.5 mm in width. The area under the valve seat where the plunge cut ends and the casting resumes cannot be blended by hand, machined, or chemically processed to create a smooth transition. The 90 degree bend at the bottom of the valve seat and the aluminum directly below it will be measured with a gauge and must conform to the maximum diameters and depths listed below.

4.1.5.3 No aluminum in the bowl area (other than that specified for the plunge cut) or the ports may be removed, added, or manipulated for any reason. It is understood that cylinder heads may look slightly different from bowl to bowl due to casting irregularities. No material may be removed or added from the short turn radius in the port.

Engine	Maximum Intake Throat Diameter	Maximum Exhaust Throat Diameter	Max. Throat Depth (from bottom of valve seat)
1.6 Liter	1.095 inches	0.948 inches	12 mm
1.8 Liter	1.178 inches	1.020 inches	12 mm

4.1.5.4 Un-shrouding of valves is explicitly limited as follows: The wall of allowed relief cut must be a single cut parallel and concentric with the valve guide for the full depth of the cut. The cut must be cylindrical with no taper. The bottom of the cut must form a 90 degree angle with an allowance for a bevel or curve whose radius is not to exceed .010". There must be a sharp, non-modified and non-deburred edge where the valve relief cut first meets the chamber. No part of this cut (except where it intersects the head gasket surface, which may be deburred up to .040") is to be blended by hand, machined, or chemically processed in any way to create a smooth transition. The maximum dimensions are listed below, measuring from guide centerline to chamber edge:

Engine	Maximum Intake Valve Radius Relief Cut	Maximum Exhaust Valve Radius Relief Cut
1.6 Liter	0.687 inches radial	0.600 inches radial
1.8 Liter	0.760 inches radial	0.675 inches radial

4.1.6 Camshaft

4.1.6.1 Camshafts must comply with the official camshaft specifications supplied by the SCCA Club Racing Tech Department. [Available at www.SCCA.com] The camshaft and crankshaft sprockets must be as supplied by Mazda. Camshaft timing must not be altered; the belt must be installed as specified in the Mazda factory service manual.

4.1.7 Valves

4.1.7.1 OEM valves must be supplied by Mazda. Valve location or angle must not be moved. Reshaping of the valves is strictly prohibited. Valve guides may be replaced provided the position of the valve is not changed and the replacement guides are Mazda OEM parts. Valve stem installed height must be per the Mazda factory service manual. Valve stem seals must be Mazda OEM parts. Valve seats may be cut provided the valve seat angles are stock Mazda three angle cut as defined below.

4.1.7.2 A valve job will consist of only three flat angles; radius cuts are not allowed. A 45 degree seat angle must be used, which may vary in width from .030 inch to .050 inch. To narrow or correctly position the face angle, a bottom angle of 70 degrees must be used. To narrow or correctly position the face angle, a top cut of 30 degrees may be used. All angles must not extend off the seat into the aluminum casting at the top or bottom of the seat.

4.1.8 Valve Springs

4.1.8.1 Valve springs must be Mazda OEM as specified in the Mazda factory service manual. Valve spring shims are not permitted, except the one standard shim that is used under every valve spring. Only the Mazda shim may be used and the OEM dimensions must be maintained.

4.1.9 Compression ratio

4.1.9.1 Maximum allowed compression ratios are listed in the following table:

Model Year	Compression Ratio
90-93	9.4:1
94-97	9.0:1
99-00	9.5:1
01-05	10.0:1

4.1.10 Intake Manifold

4.1.10.1 The intake manifold must be a stock Mazda part, without any material added or removed. No coating is permitted on the exterior or interior of the manifold. Injectors must be stock Mazda OEM parts, correct for the model year of the car. All air entering the intake tract shall pass through the fuel injection air inlet.

4.1.10.2 1.6L cars may replace the stock air box with a cone style air filter assembly. The air filter element is unrestricted. No ducting or baffling of air to the air filter is permitted. However, the forward-facing driver's side turn signal indicator may be removed. The stock plastic air tubes between the AFM and the throttle body may be covered or wrapped.

4.1.10.3 1.6L cars may open and adjust, but not modify, the OEM airflow meter. For 1.6L cars, the position of the air flow meter may be moved provided it remains attached to the unmodified factory intake tube. 1.8L cars must use the stock air box, but the air filter element is unrestricted. Mass airflow sensors may not be modified, adjusted or opened.

4.1.10.4 1.8L cars must use the stock air box, but the air filter is unrestricted. Mass air flow sensors may not be modified, adjusted or opened. 1.8L cars must use an air restrictor plate. The restrictor plate must be placed between the throttle body and plenum. All intake air must pass through the restrictor plate. Restrictor plates must be the proper size as listed below. Restrictor plates must be from Mazdaspeed Motorsports Development of from SCCA Enterprises, and must not be modified. An OE (or equivalent) gasket shall be used on both sides of the restrictor plate.

Restrictor Plate Size	
90-93	None
94-97	None
99-00	38mm
01-05	40mm

4.1.10.5 2001-2005 cars may replace air intake tube BP6D-13-331 with the 1999 air intake tube BPW-13-331B

4.1.11 Fuel System

4.1.11.1 The fuel pump must be a Mazda or OEM equivalent part . Any adjustable, mechanical, fuel regulator may be used. It may not be mounted in the cockpit. It may not be adjusted electronically or from the cockpit. Cars equipped with a factory installed manifold vacuum reference for the fuel regulator may use it but it must not be altered in any way. The unleaded fuel filter trap door and restrictor plate in the filler neck may be removed. A fuel sample test port may be added.

4.1.11.2 Fuel filler tube venting may be defeated (loop or block vent lines in trunk).

4.1.12 Exhaust System

4.1.12.1 1.6L (1990-1993): The exhaust manifold internal factory welds may be ground from the interior of the OEM exhaust manifold up to 1” from the mounting surfaces of the cylinder head and the collector. A bead of weld or braze may be added to the outside of the exhaust manifold inlet and outlet mounting flanges for the purposes of repair only. No coatings are permitted on the exterior or interior of the manifold. Heat wraps may not be used.

1.8L (1994-1997): A bead of weld or braze may be added to the outside of the exhaust manifold inlet and outlet mounting flanges for the purposes of repair only. No material may be removed. No coatings are permitted on the exterior or interior of the manifold. Heat wraps may not be used.

All other years: The exhaust manifold must be Mazda OEM, without any material added or removed. No coatings are permitted on the exterior or interior of the manifold. Heat wraps may not be used.

4.1.12.2 The 1999-05 Miatas with California emissions equipment may substitute the Federal emissions OEM exhaust manifold and ECU for the OEM CA exhaust manifold/ catalytic converter assembly and ECU.

4.1.12.3 The post catalytic converter oxygen sensor may be disabled, replaced, relocated, or removed; the resulting hole (if present) may be plugged. Original exhaust system heat shields may be removed.

4.1.12.4 The factory exhaust system beyond the OEM front down pipe may be replaced, provided the following are true:

a) The replacement system retains the original configuration (i.e., single tube design) and the tubing is a maximum of 2.3 inches outside diameter measured at least 6” from downpipe flange or muffler. The maximum length of tubing used for the system beyond the OEM down pipe shall not exceed 120 inches (includes catalytic converter replacement pipe if used).

b) The pipe may end anywhere after the rear sub-frame. Forward of the rear sub-frame, the pipe must follow the original path of the OEM exhaust system. The exhaust system shall not create any new openings in the rear bumper.

c) No expansion chambers. Up to two mufflers may be added. The muffler(s) shall not exceed a maximum length (parallel to the longitudinal centerline of the car) of 34 inches. The muffler(s) shall not exceed a maximum width of 24 inches (parallel to the lateral centerline of the car). In addition, the sum of the length and width of the muffler shall not exceed 40 inches.

d) The exhaust system shall meet all event specific sound requirements.

e) A catalytic converter may be gutted, removed, or replaced with a catalytic converter replacement pipe. The replacement pipe must not exceed 17.5 inches in length and have an outside diameter no greater than 2.375 inches.

f) No portion of the exhaust may be wrapped with any type of insulating tape, nor shall any portion of the exhaust, internal or external, be coated with any thermal coatings.

4.1.13 Lubrication System

4.1.13.1 The oil pan must be as supplied by Mazda. No modifications are permitted. The windage tray must be used and may not be modified in any way.\

4.1.13.2 Allow any OEM equivalent Mazda Miata oil filter.

4.1.14 Cooling System

4.1.14.1 The water pump must be a Mazda or and OEM equivalent part. The water pump pulley must be the stock Mazda part. No modifications are permitted.

4.1.14.2 Any radiator may be used, provided it is mounted in the original location, maintains the same plane as the original core, and requires no body or structure modifications to install, and serves no other purpose (ex. directing cold air to the airbox). Any openings created by fitting an alternate radiator must be blocked to prevent air from entering the engine compartment. The top gap between the radiator core support and the radiator may be blocked. At least one functional stock OEM cooling fan must be maintained and mounted in the stock location. The fan shroud may be modified for installation.

4.1.14.3 Thermostats may be modified, removed, or replaced.

4.1.14.4 All 1990-1997 cars may install the upper radiator seal, part # NA75-50-OK7A.

4.1.14.5 A radiator screen of ¼ inch minimum mesh may be added in front of the radiator and contained within the bodywork. Tape may be applied to the mesh.

4.1.14.6 Engine coolant fluid, coolant/ heater hoses and clamps may be substituted. Upper and lower radiator hoses may be replaced only with rubber or silicone hoses. Heater core may be bypassed. It may not be modified or removed. Heater water control valve(s) may be added or substituted.

4.1.15 Electrical Equipment

4.1.15.1 The ECU and engine electrical harness must be as supplied by Mazda. No modifications are permitted. The ECU maps and inputs must not be modified. Chips may not be replaced. The OBDII diagnostic port must be operational in all 1996-2005 cars.

4.1.15.2 ECU to engine harness (part # 0000-10-020E-99) and injector harness (part # 0000-10-080D-99) may be used on 1999 and 2000 model year cars. They must be used in their entirety and may not be modified an any way.

4.1.15.3 Ignition coils must be stock Mazda parts. No modifications are permitted.

4.1.15.4 All sensors related to engine operating parameters must be used and must be stock Mazda parts. These sensors, their locations and mounts, and their wiring harness leads may not be altered except as permitted below. Any sensors required for analog type gauges must be in addition to the Mazda sensors. Data acquisition sensors may be added. Relocating the oil pressure sensor in order to install an oil pressure gauge is permitted. On 96-05 cars a single fixed bracket may be installed to support and secure the crank position sensor (CPS) in its stock location. The bracket may only attach to the CPS, the CPS mounting bolt, and the closet oil pump threaded mounting hole and must serve no other purpose.

4.1.15.5 The alternator must be OEM equivalent. The alternator drive pulley must be stock. The alternator must not be disabled in any way. Spark plugs and spark plug wires may be substituted. Ignition timing is unrestricted within stock adjustment capability.

4.1.15.6 Batteries may be replaced with those of an alternate manufacturer, provided they are of similar amp-hour capacity, size, and weight. Batteries shall be fitted in the stock location. Additional battery hold-down devices may be used and are strongly recommended.

4.1.15.7 For 1999-2005 model years only, it is permitted to alter the ignition timing either by elongating the mounting holes of the stock crankshaft position sensor trigger wheel or by replacing it with the Mazda adjustable trigger wheel, part number 0000-10-5100-AJ.

4.1.15.8 It is permitted to remove all components of the cruise control system.

4.1.15.9 It is permitted to remove the horn.

4.1.15.10 An electrical pigtail ranging from 3” to 6” in length and terminated with any 3 pin electrical connector may be soldered and potted to the OEM cam sensor for the purpose of correcting a known issue with the factory connection. The factory harness connector may be removed and replaced with the appropriate mating connector.

4.1.15.11 Auxiliary control of the radiator cooling fan may be added to power the fan independent of the ECU. OEM control of the fan must remain functional.

4.1.16 Flywheel

4.1.16.1 The stock Mazda flywheel must be used. No modifications are permitted except for normal resurfacing for clutch wear. The following table provides minimum weights with pilot bearing:

Model Years	Minimum Weight(lbs)
90-93	17.6
94-05	17.0

4.1.16.2 The 94 model year may use the flywheel from the 95-05 model years. If the 1994 flywheel is used, it must weight a minimum of 18.5lbs.

4.1.17 Clutch

4.1.17.1 All cars must use either the stock OEM pressure plate or the ACT pressure plate Mazdaspeed part #: 0000-0205401-SS-1.6L cars or 0000-0205404-AC-1.8L cars. The unmodified pressure plate must be bolted directly to the stock, unmodified flywheel. Any clutch disk may be used. Alternate clutch lines are permitted, must serve no other purpose.

4.1.18 Miscellaneous

4.1.18.1 The use of the following non-standard replacement parts is permitted provided the use does not result in any unauthorized modification of any other component.

a) Fasteners – nuts, bolts, screws, washers, studs, etc. (Head bolts, rod bolts, flywheel bolts, and crank pulley bolt must be used as provided by Mazda.)

b) Gaskets and seals, except as specified elsewhere

c) Mechanical tachometer and analog gauges

d) Oil and lubricants

e) The factory air conditioning systems may be removed. Items that serve a dual purpose, such as the alternator/ air conditioning compressor bracket, may not be substituted.

4.1.19 Transmission

4.1.19.1 Transmission ratios must remain stock. 1999-up cars shall only use the 5 speed transmission. Any 1990-2005 Miata 5 speed transmission may be used and required items for conversion may be used.

4.1.19.2 Transmission countershaft spacer Mazda p/n M504-17-304 may be replaced with a splined spacer, Mazda part number 0000-02-5722-SP.

4.1.19.3 Lubricants may be substituted with any lubricant.

4.1.19.4 4.1.19.4 Updating or backdating of transmissions, inclusive of shifters, from 90-05 is permitted. OEM shifters must be retained.

4.1.19.5 4.1.19.5 Reinforcement of the differential housing ears is allowed for the purpose of repairing or reducing breakage at the factory stress riser "notch".

4.1.19.6 Rear drive axle assembly consisting of constant velocity joints (inner and outer), axle shafts, boots and all associated parts that make up a complete drive axle assembly must be an OEM part. All internal component dimensions are un-restricted but must be ferrous material.

4.1.19.7 Mazda Motorsports 5 speed transmission gear set kit part number 0000-02-5800 may be used. If the Mazda Motorsports competition gear set is used, it must be used in its entirety without any modifications or alterations. Mixing and matching of the OEM gear set components and the Mazda Motorsports competition gear set components is not permitted. Mazda Motorsports competition gear set consists of the following parts:

(1) 5/R Hub and Slider	(1) 2nd Gear - One Piece Synchro
(1) 3rd Gear	(1) 5th Gear Pair .81 Ratio
(1) Input Shaft	(1) Counter Shaft
(1) Countershaft Splined Collar	(1) Thrust Washer

4.1.20 Final Drive/Differential

4.1.20.1 All cars shall only use the 4.3 differential ratio. All cars may use the stock 4.3 unmodified OEM open differential or one of the approved alternates listed below.

4.1.20.2 1990 to 1993 Miatas may use the stock, unmodified viscous limited slip differential or the MAZDASPEED Motorsports Development limited slip differential, part number #QN10-64-A00 (previously TOY1-27-200 & 0000-02- 5501). Alternate MAZDASPEED #0000-02-5500 limited slip differential is permitted.

4.1.20.3 1994 and newer cars may use the stock limited slip (Torsen or Tochigi Fuji) differentials from 94-05 models. 4.3 gear ratio must be retained.

4.1.20.4 The 90-93 Miatas may convert to the 94-05 differential assembly and must retain the 4.3 differential gear ratio. This conversion includes the driveshaft and half-shafts. The original 90-93 model rear suspension uprights must be retained.

4.1.20.5 Lubricants may be substituted with any lubricant.

4.1.21 Chassis

4.1.21.1 Suspension modifications are limited to the addition of the MAZDASPEED Motorsports Development "Spec Miata kit" and those modifications detailed in this area. MAZDASPEED Motorsports Development Spec Miata Kit includes:

1990-93 1.6 DOHC	K-SPEC-M5-SUSP
1994-97 1.8 DOHC	K-SPEC-M5-SUS8
1999-up 1.8 DOHC	K-SPEC-M5-SUS9

4.1.21.1.1 Shocks (including internals) must be as delivered by Bilstein/Mazda/Penske. No modifications to the compression and/or rebound forces are allowed.

4.1.21.1.1.1 Bilstein front MAZDASPEED part #: 0000-04-5225-BL (Bilstein part #: B46-1488 or 24-014885)

4.1.21.1.1.2 Bilstein rear MAZDASPEED part #: 0000-04-5226-BL (Bilstein part #: B46-1489 or 24-014892)

4.1.21.1.1.3 Penske Front Penske SM Shock Mazda part #: 0000-04-5275

4.1.21.1.1.4 Penske Rear Penske SM Shock Mazda part #: 0000-04-5276

4.1.21.1.1.5 Penske SM Shock Kit w/Top Mount Mazda part #: 0000-04-5720-KT

4.1.21.2 All cars utilizing Bilstein shocks shall use the Fat Cat Motorsports Spec Miata shock mount/bump stop kit (FCM-MT-KIT-SM) unmodified and in its entirety or the unmodified Mazdaspeed bump stop in conjunction with the 1999-up stock upper mount assembly consisting of the upper mount, and shock body spacer over the shock shaft. All other OEM upper mounting hardware shall be discarded. A metal or delrin plastic spacer described by SCCA may be added between the Mazdaspeed bump stop and the 1999 shock hat. All cars utilizing Penske shocks shall use the Penske top mount/bump stop kit Mazda part #: 0000-04-5277.

4.1.21.3 1990-97 cars may update to the sub frame braces found on stock 1997 cars utilizing the MAZDASPEED Motorsports Development Spec Miata kit. 2001-2005 (VVT) model years must remove the additional intermediate underbody/floorpan attached bracing (Mazda part number N067-56-G11A Base plate & part number N067-56-H10A cross member).

4.1.21.4 Anti-roll bar links may be replaced and may be adjustable, but the attachment points must remain stock. The control arms and specified anti-roll bar may not be modified. One end of the sway bar(s) may be disconnected as a suspension tuning aid. The bar must remain in place and be solidly attached to the suspension on one end. A locating ring for the rear anti-roll bar may be added; it must serve no other purpose. Metal shims of up o 1/8" total thickness may be added between each anti-roll bar mount shackle and its stock mounting point on the chassis. Anti-roll bar dimensions are as follows:

Year	Front	Rear
1990-1993	24mm, adjustable	15mm adjustable
1994-2005	27mm, non adjustable	15mm adjustable

4.1.21.5 Suspension alignments (camber, caster, and toe) are unrestricted within the limits of the unmodified factory adjustments. Minimum ride height is unrestricted.

4.1.21.6 No relocation or reinforcement of any suspension component or mounting points is permitted.

4.1.21.7 Hardware items (nuts & bolts) may be replaced by similar items performing the same fastening function(s).

4.1.21.8 Manual or power steering racks may be used. Power steering racks may be converted to manual by removing all power steering components.

4.1.21.9 Towing eyes per GCR are recommended. Stock towing eyes may be modified, replace, or removed but may serve no other purpose.

4.1.21.10 Hubcaps and wheel trim shall be removed.

4.1.21.11 All chassis/structural/electrical repairs, if performed, shall be in concurrence with factory procedures, specifications, and dimensions. Unless specifically authorized by the manufacturer for repair or allowed by these rules, no reinforcement, i.e., seam welding, material addition, etc., is permitted.

4.1.21.12 The factory installed front shock tower connector/brace is not permitted on the 1999 and newer cars.

4.1.21.13 The Mazdaspeed motor mount, part NAY1-39-040 is allowed.

4.1.21.14 All cars are permitted to use the “R” model tie rod ends part # N021-32-280A.

4.1.21.15 The rubber vibration damper may be removed from the pinion flange on 1994 and newer differentials.

4.1.21.16 For camber adjustment only: inner suspension bushings, on the front upper control arms, may be replaced with non-metallic offset bushings. The bushings may use metal (inner and/or outer) sleeve(s). Material and design must be the same in all four positions. The control arm may be modified to allow for pinning the bushing to prevent rotation. Spherical bearings are not allowed. Or, extended lower ball joints, part # BL-ELBJ, with BAUER suspension laser etching (etching must be visible on ball joint) may be used in place of stock lower ball joints.

4.1.21.17 To facilitate frequent lifting of the vehicle without causing damage, one piece of steel angle iron or square steel tubing may be added under the rocker panel inboard of the factory pinch weld flange on each side of the car. Angle iron and/or square steel tubing dimensions shall not exceed 12” x 1” x 1” x .125 thick. The added support shall be securely fastened to the car and serve no other purpose.

4.1.21.18 Mazda part number 0000045HUB-ST is permitted

4.1.21.19 Front subframes may be reinforced by use of Mazda Part #0000-04-5989 (Subframe Reinforcement). If installed, the Subframe Reinforcement shall be welded around the perimeter only. No other modifications to subframes are permitted.

4.1.21.20 For purposes of making engine installation easier, it is permitted to create a vertical slot between the top 2 factory mountingholes on the driver’s side of the subframe to match the existing slot on the passenger side. The subframe is comprised of a topand bottom layer of sheet metal. The only modifications permitted are to the top layer of sheet metal to match the bottom layer of sheet metal which is already slotted. The slot may only connect the two existing holes and shall not exceed the width (.43”) or height of the existing OEM holes. No material may be added.

4.1.21.21 NA 90-97 cars may use the OEM Mazda 99-05 (NB) model year rear uprights. NA Cars upgrading to the OEM Mazda NB rear upright must use the NB rear upright on both sides of the car. Miss-matching of rear uprights is not allowed.

4.1.21.22 On the upper control arms, the original outer mounting holes may be slotted to obtain additional camber. The max slot size shall not exceed 0.433” X 0.600”. No material shall be added.

4.1.22 Brakes

4.1.22.1 Backing plates and dirt shields may be ventilated or removed.

4.1.22.2 Brake lines may be replaced with steel lines or Teflon lined metal braided hose.

4.1.22.3 Cars with antilock braking systems must have the system disabled or removed.

4.1.22.4 Parking brake mechanisms, and actuating components, may be removed.

4.1.22.5 Brake pads and brake fluid are unrestricted.

4.1.22.6 2001 and newer cars must use the 255mm (F) and 252mm(R) brakes. The larger brakes 269.5mm(F) and 267.9mm(R) are not permitted.

4.1.22.7 A single bracket per rear brake caliper for the purposes of keeping the rear brake calipers in place in the event of a rear upper caliper pin failure is permitted. It must be installed under the head of the rear upper caliper retaining bolt and may serve no other purpose.

4.1.23 Wheels/Tires

Any wheel/tire may be used within the following limitations:

4.1.23.1 Required rim diameter is fifteen (15) inches. Maximum rim width is seven (7) inches. Minimum weight of wheel shall be 13 lbs without spacers. All four wheels must be the same dimension including offset.

4.1.23.2 All wheels must be one-piece metal castings (not multi-piece wheels, bolted, riveted, or welded together).

4.1.23.3 The following tires are allowed in the 205/50R15 size.

Toyo RA1 Toyo RR Hoosier SM6 Hoosier SM7

4.1.23.4 The front track shall not exceed 1450mm. The rear track shall not exceed 1475mm. Aftermarket wheel studs, lug nuts, and wheel spacers are permitted. If spacers are used they shall be no greater than 13mm and equal per axle.

4.1.23.5 Tire tread (that portion of the tire that contacts the ground under static conditions) shall not protrude beyond the fender opening when viewed from the top perpendicular to the ground.

4.1.24 Body/Structure

4.1.24.1 Fenders and wheel openings shall remain unmodified. It is permitted to roll under or flatten any interior lip on the wheel opening for tire clearance. Non-metallic inner fender lines may be removed.

4.1.24.2 Body repair shall be performed using every reasonable effort to maintain stock body contours, lips, etc. Any body repair modification having as its purpose increased clearance is prohibited.

4.1.24.3 The "R" package Miata chin spoiler is allowed on 1990-1997 cars provided it is mounted in the OEM location. 1999-up cars may use the OEM chin spoiler for these cars (99-00 p/n: NC10-V4- 900F or 01-05 p/n: NO67-V4-900G). Aftermarket chin spoilers may be used but must use the same mounting holes, must have the same dimensions and must perform only the same functions as the OEM chin spoiler. Any material may be used. Rear spoilers and rocker panel moldings, including OEM design, are prohibited.

4.1.24.4 Windshield Clips/Rear Window Straps, are permitted.

4.1.24.5 Convertible tops and attaching hardware shall be completely removed. Cars may compete with the Mazda factory detachable hard top in place (latches shall be replaced with positive fasteners), but it is not mandatory. When no top is used, driver shall wear arm restraints, and the cage will meet the helmet clearance rule. It is allowed to attach the hard top to the upper windshield bar of the roll cage.

4.1.24.6 Body side moldings and wheel openings trim pieces may be removed.

4.1.24.7 The plastic trim on the hood may be removed.

4.1.24.8 Hood and trunk clips are permitted. Stock hood and trunk latches may be modified, disabled, or removed.

4.1.24.9 Ducting may be added to provide fresh air to the driver compartment. This ducting shall be located in the driver and/or passenger vent window area by means of a transparent/ alternate vent window material and duct with no modifications to the bodywork. To improve driver exit through the window area, the driver side (only) vent window and vent window supporting frame may be removed as a pair. If removed, ducting may be in the passenger side vent window only.

4.1.24.10 Radio antennas may be removed. Antennas for two-way radios may be added.

4.1.24.11 Fog lamps may be removed. If fog lamps are removed, lamp openings in the front fascia must be

4.1.24.12 blocked to not allow air flow through the opening. Any means of blocking air flow shall not serve any other purpose.

4.1.25 Driver/Passenger Compartment – Trunk

4.1.25.1 The driver's seat shall be replaced with a one-piece bucket-type race seat. Seat mountings may be reinforced. Factory seat tracks/brackets may be modified, reinforced, and/or removed to facilitate replacement mountings provided they perform no other function. The passenger seat may be removed. The transmission tunnel may be modified for the purpose of installing a competition driver seat. The driver's side floor pan may be modified to accommodate larger/taller drivers. All modifications shall be contained between the transmission tunnel, driver's side rocker, rear bulkhead and no more than 29" forward of the rear bulkhead. The modification shall not extend below the factory floor stiffener/frame rail. The steel used in the modification shall be no thinner than .058". All modifications shall be welded in place. This modification shall serve no other purpose other than seating position.

4.1.25.2 Any steering wheel, except wood rimmed types, and its required mounting modifications may be used. Removable steering wheels are permitted. Any shift knob may be used.

4.1.25.3 Gauges and instruments may be added, replaced, or removed. They may be installed in the original instrument(s) location using a mounting plate(s), or any other location using a secure method of attachment. Other than modifications made to mount instruments and provide for roll cage installation, the remainder of the dash "board" or panel shall remain intact.

4.1.25.4 OEM exterior mirrors shall be retained. Mirror mounting position may be changed, but must remain within 10" of the original location on the exterior of the door. The OEM interior mirror may be removed, relocated, or replaced by a mirror of any design. Additional mirrors may be added, both interior and exterior.

4.1.25.5 Carpets, center consoles, cargo bins, seat belts, floor mat, firewall insulation/blanket, radio system, headliners, dome lights, grab handles, sun visors and their insulating and attaching materials may be removed. Other than to provide for the installation of required safety equipment or other authorized modifications, no other driver/passenger compartment alterations or gutting are permitted.

4.1.25.6 Two way radios may be used.

4.1.25.7 Spare wheels and tires, jacks and tools shall be removed from the cargo/trunk area. Spare tire covers and trunk mats, trim and/or carpeting shall be removed. The trunk trim plate that is used to mount the factory jack handle may be removed.

4.1.25.8 Modifications may be made to the foot pedals to improve the comfort and accessibility to the driver. Dead pedal/foot rest and heel stop may be added.

4.1.25.9 If ballast is required to meet the required weight it shall be added as follows:

1) All ballast shall be securely mounted on the passenger floor.

2) Each segment of ballast shall be fastened with a minimum of two bolts and be approved by tech.

3) Holes may be drilled in the passenger floor pan for the purposes of mounting the ballast and the floor pan may be reinforced for that purpose only.

4.1.25.10 All cars shall run with both front door windows fully open (down).

4.1.25.11 Removal of the speedometer cable is permitted.

4.1.26 Safety

4.1.26.1 An electrical master (“kill”) switch is recommended.
4.1.26.2 Installation of a fire extinguisher or fire system is required.
4.1.26.3 Air bag systems shall be disarmed and may be removed.
4.1.26.4 In any automobile where allowed removal of upholstery, seat belts, etc., creates an opening between the driver/passenger compartment and an exposed gas tank, or part thereof, including the filler tube, a metal bulkhead which completely fills such opening shall be installed.

Spec Miata 2

1. GCR

1.1 All automobiles must comply to GCR ***Automobiles – General Regulations***.

2. Purpose and Intent

The SM2 class is designed for MCSCC members looking for a racing series where they can be competitive in an older, affordable car, and keeping cost of tires lower. The popularity of Spec Miata over the last decade has introduced a lot of racecars to the market. The purpose of this class is to allow those cars that adhere to Midwestern Council, NASA, or SCCA competition rules to compete with minor modifications. These modifications are for the sole purpose of keeping the competition costs down and bringing the competition closer together.

3. Classification and Weight

3.1 1990-1993 Mazda Miata 1597 cc 2275 lbs

3.2 1994-1997 Mazda Miata 1839 cc 2350 lbs

All vehicles shall be weighed with driver as raced.

4. Authorized Modifications

SM2 cars will adhere to all rules as listed in the Midwestern Council of Sports Car Clubs GCR for Spec Miata with the following exceptions.

4.1 Engine

4.1.1 Exhaust System

4.1.1.1 1.6L (1990-1993): May use exhaust header, part number #56005, from Racing Beat. This is the only approved header and is allowed for 1.6L engines only.

4.1.2 Tires

4.1.2.1 Tires must be size 205/50R15 with a tread wear rating of 190 or higher.

Spec MX-5

1. GCR

1.1 All automobiles must comply to GCR ***Automobiles – General Regulations***.

2. Purpose and Intent

Spec MX-5 (SMX) is intended to provide the membership with the opportunity to compete in similarly prepped, low cost 2006-2015 production-based MX-5 cars.

3. Definition

All automobiles are to comply with current SCCA SPEC MX-5 (SMX) rules unless noted below.

3.1 Do not need to comply with data acquisition or video camera requirements. If a video camera is used/available, MCSCC may request a video compatible with Windows for the sole purpose of investigating incidents.

3.2 Parts confiscation and penalties specific sections will not apply. MCSCC Competition Regulations regarding impound, protests, and penalties will apply instead.

B-Spec Class

These specifications are presented as an adjunct to the Manufacturer's Service Manual. They are not meant to supersede the information that is in the manual that legitimately applies to the make, model, and year of car with the exception of the following items: TIRE SIZES, RIM WIDTHS, SPRINGS, ANTI-ROLL BAR(S), and PERFORMANCE EQUIPMENT. In the case of the foregoing exceptions, the B-Spec Competition Rules will have priority.

1. Definition

The B-Spec Category shall be considered primarily as a form for the membership to race street stock auto- mobiles. Eligibility of cars may be discontinued at any time, for any reason other than competitive stature. The proof of legality or illegality shall rest upon the protester and/or protestee.

NOTE: B-Spec category cars shall be in compliance with Federal Standards, specifically EPA certifications, and as specified for each automobile listed on its B-Spec Specification line and as permitted by these rules. Overhaul procedures that in the slightest way would increase performance are not to be utilized (e.g., milled heads/blocks, porting, etc.). Blueprinting and balancing are inconsistent with the philosophy of this class and are not permitted.

2. Automobile Eligibility

Only those cars listed on spec lines are eligible to compete. Cars classified will be approved by EPA and DOT for sale in the United States and by Environment Canada for sale in Canada. They shall be models available to the general public for purchase. The vehicle identification number (VIN) shall correspond with the model automobile classified. At least one VIN plate or stamping shall remain in place on the dashboard or chassis that corresponds with the model automobile classified.

3. Classification

Classifications of automobiles eligible for competition will be reviewed on an annual basis and will be effective as of January 1st.

4. Technical and Safety Items

The following represent the only safety items and modifications permitted and required on automobiles involved in B Spec competition. Cars must meet comply with the GCR. The addition of safety items not specifically listed is not permitted. No permitted component/modification shall additionally perform a prohibited function.

4.1 Roll cages shall be contained entirely within the driver/passenger compartment and must comply with the GCR.
4.2 Installation of a fire extinguisher or fire system as specified in the GCR.
4.3 Installation of a safety harness system as specified in the GCR.
4.4 All cars shall run with both front door windows fully open (down) if equipped and shall have a driver's side window safety net per the GCR. Any cars where a window safetynet cannot be installed, arm restraints shall be used. Arm restraints are not an acceptable substitute for window nets in other cars. Window safety nets shall be mounted in such a manner to provide protection in the event the driver's door opens. Rear windows shall be run in the closed (up) position.
4.5 Passive restraint systems shall be deactivated.*
4.6 Air bag systems shall be disarmed and may be removed.* If so equipped, the rolling door lock mechanism may be deactivated by unplugging the components.
4.7 The driver's seat (only) shall be replaced with a one-piece, bucket-type race seat. Standard seat tracks/brackets may be modified, reinforced, and/or removed to facilitate replacement mountings provided they perform no other function.
4.8 Steering lock mechanisms may be removed or disabled.
4.9 An electrical master switch may be installed.

*If car is used on public roads, these items should be replaced, reactivated, rearmed, etc. when not in competition.

5. Vehicle Preparation

The following represents the only items authorized in the preparation of a vehicle for B-Spec competition other than safety items as required by the GCR. Modifications shall not be made unless specifically authorized herein. No permitted component/modification shall additionally perform a prohibited function.

5.1 Appearance shall be neat and clean. Automobiles that are dirty either externally or in the engine or passenger compartments, or that show bodywork damage or that are partially or totally in primer, or that do not bear the prescribed identification marks shall not be approved for competition. Vehicles maybe painted any color(s).
5.2 Towing eyes shall be fitted per the GCR.
5.3 Hubcaps, wheel trim rings, jack, and tools shall be removed.
5.4 All mud flaps shall be removed.
5.5 Spare wheels and tires may be removed. Spare tire covers and trunk mats and/or trunk carpeting shallbe removed if they present a hazard as a loose flying or flapping object.
5.6 All adjustments shall be at the manufacturer's specification and/or within the manufacturer's specified tolerances unless they are specifically allowed in the GCR (example camber angle).
5.7 Tires:

a. *Hankook P205/50ZR15 Z214 C51 Compound or Hankook 200/580R15 Z217 (rain) is required for competition. No mixing of rain and dry tires.*

b. *When using the wet tire all cars get a 0.2" lower ride height allowance due to smaller radius of the wet tire.*

5.8 Wheels: Required wheel/rim diameter is fifteen inches (15"). Maximum wheel/rim width is seven inches (7"). Minimum Wheel/rim weight shall be 13 lbs. All wheels shall be one-piece metal castings or metal two piece welded. All four wheels must

be the same dimensional offset. Aftermarket wheel studs and/or wheel bolts are allowed. Wheel bolts may be replaced with studs and nuts. Wheel spacers are allowed, the same thickness spacer must be used on all four corners.

Wheels are permitted any offset provided the tire tread (that portion of the tire that contacts the ground) does not protrude beyond the fender opening when viewed from the top perpendicular to the ground.

5.9 Radio/stereo audio equipment and air conditioning refrigerant systems are the only options permitted and may be non-manufacturer, standard equipment. Two-way radios may be used. Hand controls are allowed in those instances where the driver can demonstrate the physical need for them. Removal of rear window wipers and wiper motor is allowed.

5.10 Fuel, coolant, oil fluid hoses and clamps, oil filters, fuel filters, and belts (fan, alternator, etc.) may besubstituted with others of equivalent manufacturer's specifications.

5.11 Brake fluid: May be substituted with other equivalent manufacturer's specification.

5.12 Lubricants: Lubricants may be substituted with any lubricant. Additives are unrestricted.

5.13 Spark Plugs: Authorized spark plugs listed in spark plug manufacturer's application charts, owner's manual, manufacturer's shop/service manual, or equivalent justified by one cross reference chart. Use of resistor- or non-resistor spark plug allowed.

5.14 "Special performance" specifications from the manufacturer that go beyond those listed on a specification line for a car will not be considered valid.

5.15 Ride height: Minimum ride height is six (6) inches, to be measured without driver at the lowest pointof the rocker panels, but not to include welded seams or fasteners. A vehicle may have a ride height listed in the spec line, the competitor must conform to the spec line.

5.16 Batteries may be replaced with those of alternate manufacture provided they are of similar amp hour (Ah) capacity and weight. Battery must remain in stock location. Additional hold-down brackets are allowed.

5.17 Weight: The minimum weight as listed on the B Spec line is with driver and ballast may be added tomeet the listed minimum weight. Ballast placement must conform to the GCR. If a cool suit system is utilized, the cool suit system shall be weighed with the car as it came off the track.

A. The ballast shall be in segments no lighter than ten (10) pounds and no heavier than fifty (50) pounds.

B. Each segment shall be fastened with a minimum of two (2) one-half inch (1/2") bolts and positive lock nuts of SAE Grade 5/Metric 8.8 or better, and shall utilize large diameter, load distributing washers.

5.18 Fuel: Only the fuel type specified by the owner's or manufacturer's shop/service manual may be used.

5.19 Removal of Air Conditioning System: The manufacturer's or aftermarket air conditioning system may be removed. Items that serve a dual purpose, such as the alternator/air conditioning compressor bracket, may not be substituted. Idler pulleys and belts may be substituted as needed when compressor is removed.

5.20 Removal of radio and speaker components is permitted. Removal of horn and cruise control system is permitted.

5.21 A radiator screen of minimum one-fourth inch (1/4") mesh may be added in front of the radiator and contained within the bodywork.

5.22 Air filter elements may be substituted with other air filters of equivalent specifications and fit in the standard location with no modifications. The filter element must be substantiated by a minimum of one (1) manufacturer cross-reference for specific vehicle application.

5.23 Any brake pad or lining may be used. *Metal or plastic dust shields may be removed or modified by removing material.*

5.24 Standard replacement brake rotors/drums may be obtained from sources other than the original manufacturer provided they are the exact equivalent.

5.25 The Club may approve the use of automatic transmissions and/or hand controls on a case-by-case basis.

5.26 Interior mirror(s) may be replaced with a multi-panel type mirror but shall not extend beyond the confines of the interior.

5.27 Any part of the exhaust system beyond the primarycatalytic converter(s) may be replaced provided:

A. Said replacement system retains the same original configuration, e.g., routing, single, dual, etc.

B. The system exits from the body in the same approximate location(s) as the original. When an original equipment single exhaust system is cosmetically split into dual outlets, it is permitted tocontinue as a single system provided it exits in approximately the same location as one of the originals.

C. The system meets all appropriate event-specific sound level requirements.

D. All oxygen sensors must be intact and in stock location.

E. Primary catalytic converter may not be modified in any way.

F. Exhaust manifolds and primary catalytic converters must be OEM unless specified below or in the spec line.

G . The Mazda 2, Fiat 500, 2007-10 Mini Cooper all may remove the primary cat/exhaust manifold toinstall their approved header. All oxygen sensors must be maintained. The original heat shields or heat wrap may be used to insulate the replacement header from objects they come close to.

5.28 Aftermarket steering wheels, and their required mounting modifications, are permitted. Removable steering wheels are permitted.

5.29 Lap Timing and Data Acquisition Devices that perform no function other than to relay lap times to the driver (Longacre Hot Lap, Intercomp Lap Timer, etc.) are permitted, along with the required mounting hardware and connections. Stand-alone data acquisition systems (GPS or accelerometer-based) are allowed. One connection from the OBD2 port to the stand-alone data

acquisition system is permitted. No additional sensors may be added, and the data acquisition system must not tie into the vehicle electronics in any other manner beyond this allowance.

Analog (needle type) gauges for oil pressure, oil temp and water temp may be added as long as they are not tied into the vehicles ECU in any way. Standalone shift lights may be added.

5.30 Sunroofs, Targa tops, and T-tops are only permitted if installed by the manufacturer of the vehicle. Ifinstalled, they must be retained in the closed position and securely bolted in place unless the operating rails adequately secure the panel. Glass panels are permitted. Glass panels may be replaced with a ferrous metal panel. Components (motors, cables, rails) may be removed provided the panel is securely retained.

5.31 Hatchback “privacy covers” must be completely removed.

5.32 Cosmetic plastic engine covers may be removed.

5.33 Original brake and clutch hoses may be replaced by braided stainless steel brake lines and clutch lines.

5.34 Interiors may be removed including seats, seat brackets, carpet, carpet padding, rear door panels, OEM seat belts, interior trim, and headliners. Front door window glass, front window operating mechanism, inner door trim panel, armrest, map pockets, wiring harnesses for front door locks, power mirrors, seat wiring, etc., and inside front door latch/lock operating mechanism may be removed. Original radio/ stereo audio equipment and air conditioner refrigerant systems may be removed. Heater cores, and hoses, must remain except duct work under seats. Duct work behind the dash may be trimmed but notremoved to allow for roll cage installation.

5.35 Maximum 3.5 degrees negative camber is allowed on front and rear suspensions. Strut suspensionsmay adjust camber by the use of eccentric bolts (crash bolts) at the strut-to-spindle, slotted strut mounting holes at the spindle, and/or by use of any slotted camber only adjuster plate at the top of the strut mounting plate. If upper strut slotted plates are used, they shall be located on existing chassisstructure and may not serve as reinforcement for that structure. Modifications to the top of the strut tower may be made to allow for camber adjustment only. On other forms of suspension, camber adjustment may be achieved by the use of shims and/or eccentric bolts (crash bolts).

5.36 Suspension: competitors may use the OEM suspension, any part of the manufacturer upgraded suspension kit or any B14 Bilstein shock or strut with no modifications except as required for mounting. Anypart required to adapt the B14’s to the car must be submitted for approval by the CRB and added to theindividual spec line. Any spring up to a maximum spring rate of 500 pounds may be used. The use of bump stops is optional. Adjustable swaybar end links may be used on all cars. Front sway bars may be disconnected and removed.

If a manufacture does not offer an upgrade, a competitor may submit a shock and spring package forapproval by the CRB. At the time of approval, that kit will become the standard for that make and model until the manufacture submits a factory supported kit.

The competitor supplied kits needs to be comprised of the following:

- Any non-adjustable shock absorber intended for the specific make model and year car is allowed. The shock absorber must be installed in the original mounting locations. Remote shocks are not permitted. Threaded shock bodies or adjusters may be used.
- Any spring up to a maximum spring rate of 500 pounds may be used with the OEM suspension, themanufacturer’s upgraded suspension kit, or the Bilstein B14 suspension kit.

5.37 ECU/PCM: OEM ECU/PCMs is required. Alternate engine calibrations are allowed. The car may meet federal emission standards but shall provide OBD II compliant data to the data link connector. Manufacturers may provide a stability control override procedure or module.

5.38 B Spec front and rear toe settings are free. Rear toe adjustments may be achieved using shims.

5.39 Fenders and wheel openings shall remain unmodified. It is permitted to roll under or flatten any interior lip on the wheel opening for tire clearance. Cars with plastic/composite fenders may remove any interior wheel opening lip, but the resulting material edge shall be no thinner than the basic fender materialthickness. Non metallic inner fender liners may be removed.

5.40 An oil catch can is permitted.

5.41 Optional Hood Pins may be added to supplement the original hood latch system. All parts of the originalhood latch system must remain in the car.

5.42 Fog lamps may be removed. Fog light holes must be completely covered.

5.43 Automatic and cvt transmissions versions of all legal cars are legal for competition in B-Spec meeting their spec line. Models with OEM paddle shifters are acceptable. Auxiliary transmission coolers may be approved on a case-by-case basis. Part numbers must be submitted and added to the cars spec line.

5.44 Auxiliary transmission coolers may be approved on a case-by-case basis. Part numbers must be submitted and added to the cars spec line.

5.45 Restrictor - B-Spec cars whose spec line require a restrictor will use a Flat Plate Restrictor (FPR) with the thickness of the Restrictor to be 0.050” to 0.079.

B-SPEC	Bore x Stroke (mm) Displacement (cc)	Wheelbase (mm)	Gear Ratios	Final Drive	Brakes (inches)	Weight (lbs)	Notes:
Chevrolet Sonic 4dr Sedan (12-19)	80.5 x 88.2 1796	2525	3.72, 1.96, 1.32, 0.94, 0.75 or 4.45, 2.91, 1.89, 1.44, 1.00, 0.74	3.94 or 3.47	(F) 10.8 (R) 9.0 drum	2650	32mm flat plate restrictor required. GM suspension kit #23123679 permitted. Allow rear sway bar ZZ Performance #ZZ-SNCRSB. Alternate transmission ratio's and final drive are for 6T40e automatic equipped cars only. For automatic allow Setrab 1-series Part No. FP119M221.
Chevrolet Sonic 5dr Hatch (12-19)	80.5 x 88.2 1796	2525	3.72, 1.96, 1.32, 0.94, 0.75 or 4.45, 2.91, 1.89, 1.44, 1.00, 0.74	3.94 or 3.47	(F) 10.8 (R) 9.0 drum	2650	34mm flat plate restrictor required. GM suspension kit #23123679 permitted. Allow rear sway bar ZZ Performance #ZZ-SNCRSB. Alternate transmission ratio's and final drive are for 6T40e automatic equipped cars only. For automatic allow Setrab 1-series Part No. FP119M221.
Fiat 500 (12-15)	72.0 x 84.0 1368	2300	3.91, 2.16, 1.35, 0.98, 0.77	3.73	(F) 10.1 x 0.9 (R) 9.4 x 0.4	2230	Allow Fiat suspension kit P5154820, Front damper assy with top mount P5154822, Rear damper assy P5154824, Rear coil spring adapt kit P5154825, Header kit (cat delete) P5154829 allowed. Cold air intake allowed.
Ford Fiesta 5dr Hatchback (11-19)	79.0 x 81.4 1596	2490	3.86, 2.04, 1.28, 0.95, 0.74	4.07	(F) 10.2 (R) 7.9 drum	2495	36mm flat plate restrictor required. Suspension kit #M-FR3-FAEB allowed. Rear axle bushing #000-04-2203-RR allowed. Allow rear torque bar Corksport#Mz2-3-070. Cold air intake K&N 69-3530TS is allowed. Powerflex PFR19-1511BX2 rear suspension bushing allowed. Eibach rear sway bar #35143.312 *or 35143.320* is allowed. Mazda front hub D651-33-06 and rear hub D651-26-15XE allowed. 4x100 bolt pattern wheel allowed.
Ford Fiesta 4dr Sedan (11-19)	79.0 x 81.4 1596	2490	3.86, 2.04, 1.28, 0.95, 0.74	4.07	(F) 10.2 (R) 7.9 drum	2495	34mm flat plate restrictor required. Suspension kit #M-FR3-FAEB allowed. Rear axle bushing #000-04-2203-RR allowed. Allow rear torque bar Corksport#Mz2-3-070. Cold air intake K&N 69- 3530TS is allowed. Powerflex PFR19-1511BX2 rear suspension bushing allowed. Eibach rear sway bar #35143.312 is allowed. Mazda front hub D651-33-06 and rear hub D651-26- 15XE allowed. 4x100 bolt pattern wheel allowed.
Honda Fit (07-08)	*73.0 x 89.4 1499*	*2450*	*3.46, 1.87, 1.32, 0.97, 0.76*	*4.29*	*(F) 10.3 disk (R) 7.9 drum*	*2525*	
Honda Fit (09-14)	73.0 x 89.55 1499	2500	3.31, 1.87, 1.30, 0.95, 0.73 *Or 2.99, 1.68, 1.07, 0.76, 0.55 in automatic*	4.62 *Or 4.56 in automatic*	(F) 10.3 (R) 7.9 drum	2525	Allow damper and spring set 51600F23SA100, Damper FR LH 51605F23SA100, Damper FR RH 51606F23SA100, Damper RR 52610F23SA100, Spring adjust asy RR 52691F23SA010. Seat upper FR spring 51688F23SA200, 51402FC4YA00 front helper spring and 51403FC4YA00 front spacer permitted. Front Damper Mount P/N 51920-F23S-A30 is allowed. Allow rear sway bar Progress # 62.1061. *Alternate transmission ratio's and final drive are for automatic equipped cars only and allow Setrab 50-119-7612 transmission cooler in addition to OEM.*
Honda Fit (15-19)	73.0 x 89.55 1499	2530	3.46, 1.87, 1.23, 0.95, 0.81, 0.73 *OR 2.56, 0.41, Rev: 2.71, 1.38 in CVT*	4.63 *Or 5.44 in CVT*	(F) 10.3 (R) 7.9 drum	2600	30mm flat plate restrictor required. Allow damper FR LH 51605F23SA81, Damper FR RH FR RH 51606F23SA81, Damper RR 52610F23SA80, Spring adjust assy RR 52691F23SA80, Bushing Comp, Damper RR TBD, Camber Adjuster Comp, Damper 51920F23SA82, Damper wrench kit 89211F23SA80, Hose Set, FR & RR Brake 01464F23SA810, Pad Set, XR2 D948 54022F27SA81, Disk, FR Brake 45250F23SA80, Air cleaner element assy 17220FC4YA80, Exhaust pipe assy 18300F23SA81, ACG belt (6PK858) 31110FC4YA80. Allow rear sway bar Progress 62.1063. *Alternate transmission ratio's and final drive are for automatic equipped cars only and allow Setrab 50-119-7612 transmission cooler in addition to OEM.*

B-SPEC	Bore x Stroke (mm) Displacement (cc)	Wheelbase (mm)	Gear Ratios	Final Drive	Brakes (inches)	Weight (lbs)	Notes:
Hyundai Accent GS Hatchback (13-19)	*77.0 x 85.44 1591*	*2570*	*3.76, 2.04, 1.28, 1.03, 0.89, 0.77*	*3.64*	*(F) 10.1 x 0.9 (R) 10.3 x 0.4*	*2525*	*36mm flat plate restrictor required. Allow AKSJ03-10-001 Damper Frt Assembly; AKSJ03-20-001 Damper-AST-Rear; KSJ03-20-003 Rear Upper Spring Perch Delrin; KSJ03-20-004 Rear Spring Spacers-Aluminum; KSJ03-20- 005 Rear Spring Spacer Intermediate; AKSJ03-60-001 Sump Pan Extension. Allow rear torque bar Evilla Motorsports #KR-B1.*
Kia Rio 5-door/LX (12-19)	77.0 x 85.44 1591	2570	3.76, 2.04, 1.28, 1.03, 0.89, 0.77	3.83	(F) 10.1 x 0.9 (R) 10.3 x 0.4	2525	36mm flat plate restrictor required. Allow AKSJ03-10-001 Damper Frt Assembly; AKSJ03-20-001 Damper-AST-Rear; KSJ03-20-003 Rear Upper Spring Perch Delrin; KSJ03-20-004 Rear Spring Spacers-Aluminum; KSJ03-20- 005 Rear Spring Spacer Intermediate; AKSJ03-60-001 Sump Pan Extension. Allow rear torque bar Evilla Motorsports #KR-B1.
Mazda2 (10-14)	78.0 x 83.0 1499	2490	3.42, 1.84, 1.29, 0.97, 0.78	3.85	(F) 10.1 (R) 8.0 drum	2330	Helper springs F&R 0000-04-9926, Spring spacer F&R 0000-04-9925, Front sway bar end links adjstbl 0000-04-2202, Rear sway bar 0000-04-2203-RR, Modified strut bearing plate 0000-04-2204, Crash bolt set 0000-04-2205, Allow rear torque bar Corksport #Mz2-3-070. Cold air intake Corksport Mz2- 6-117-31100 and air duct Mz2-6-120-10 are allowed. Exhaust Header Kit(cat delete) HB.EM 60-404-S-SS or HP-MZD001is allowed. Powerflex PFR19- 1511BX2 rear suspension bushings allowed. *Allow Mazda part number 0000-01-2501-CR Radiator. Header PN 0000-06-2410 allowed with a 70 lb. weight penalty.*
Mini Cooper Hatchback (R50) (02 - 06)	77.0 x 85.8 1598	2466	4.10, 2.37, 1.56, 1.17, 1.00 *Or CVT Variable Rev: 3.82*	3.51 *Or 5.76 in CVT*	(F) 11.0 (R) 10.2	2545	Allow KW: Coilover Kit: Variant 2: Gen 1 or KW equivalent, Vorshlag Mini R50/53 Camber Plates & Perches allowed. Ride height measured from the metal underneath the bottom of the plastic door rocker molding shall be no less than 5 inches. Front adjustable sway bar links part number 31 35 6 771 is allowed. Rear adjustable sway bar links part number 35 50 6 772 is allowed. Allow rear sway bar Progress #62.0210. *Alternate transmission ratio's and final drive are for automatic equipped cars only and allow Setrab 50-119-7612 transmission cooler in addition to OEM.*
Mini Cooper (R56) (07-10)	77.0 x 85.8 1598	2466	3.21, 1.79, 1.19, 0.91, 0.78, 0.68 *Or 4.15, 2.37, 1.56, 1.15, 0.86, 0.69 Rev: 3.39 in automatic*	4.35 *Or 4.10 in automatic*	(F) 11.0 (R) 10.2	2545	Allow L/F Strut-spring assembly 31 31 1 126, R/F Strut-spring assembly 31 31 1 125, Rear Shock-spring assembly 33 50 1 125. Ride height measured from *the metal underneath* the bottom of the plastic door rocker molding shall be no less than 5 inches. Front adjustable sway bar links part number 31 35 6 771 is allowed. Rear adjustable sway bar links part number 35 50 6 772 is allowed. Adjustable front camber plate part number 31 30 1 507 is allowed. Allow rear sway bar Progress #62.0210. OBX header part #10-2101-2S permitted with a 40mm flat plate restrictor. *Alternate transmission ratio's and final drive are for automatic equipped cars only and allow Setrab 50-119-7612 transmission cooler in addition to OEM.*
Mini Cooper Clubman (R55) (07 - 10)	77.0 x 85.8 1598	2547	3.21, 1.79, 1.19, 0.91, 0.78, 0.68	4.35	(F) 11.0 (R) 10.2	2545	Allow L/F Strut-spring assembly 31 31 1 126, R/F Strut-spring assembly 31 31 1 125, Rear Shock-spring assembly 33 50 1 125. Ride height measured from *the metal underneath* the bottom of the plastic door rocker molding shall be no less than 5 inches. Front adjustable sway bar links part number 31 35 6 771 is allowed. Rear adjustable sway bar links part number 35 50 6 772 is allowed. Adjustable front camber plate part number 31 30 1 507 is allowed. Allow rear sway bar Progress #62.0210. *OBX header part #10-2101-2S permitted with a 40mm flat plate restrictor.*

B-SPEC	Bore x Stroke (mm) Displacement (cc)	Wheelbase (mm)	Gear Ratios	Final Drive	Brakes (inches)	Weight (lbs)	Notes:
Mini Cooper (2011-13)	77.0 x 85.8 1598	2466	3.21, 1.79, 1.19, 0.91, 0.78, 0.68 *Or 4.15, 2.37, 1.56, 1.15, 0.86, 0.69 Rev: 3.39 in automatic*	4.35 *Or 4.10 in automatic*	(F) 11.0 (R) 10.2	2625	Allow L/F Strut-spring assembly 31 31 1 126, R/F Strut-spring assembly 31 31 1 125, Rear Shock-spring assembly 33 50 1 125. Ride height measured from *the metal underneath* the bottom of the plastic door rocker molding shall be no less than 5 inches. Front adjustable sway bar links part number 31 35 6 771 is allowed. Rear adjustable sway bar links part number 35 50 6 772 is allowed. Adjustable front camber plate part number 31 30 1 507 is allowed. Allow rear sway bar Progress #62.0210. 40mm flat plate restrictor required. *Alternate transmission ratio's and final drive are for automatic equipped cars only and allow Setrab 50-119-7612 transmission cooler in addition to OEM.*
Mini Cooper Countryman (R60) (11-16)	77.0 x 85.8 1598	2595	3.21, 1.79, 1.19, 0.91, 0.78, 0.68	4.72	(F) 11.0 (R) 10.2	2625	40mm flat plate restrictor required. Allow L/F Strut-spring assembly 31 31 1 126, R/F Strut-spring assembly 31 31 1 125, Rear Shock-spring assembly 33 50 1 125. Ride height measured from *the metal underneath* the bottom of the plastic door rocker molding shall be no less than 5 inches. Front adjustable sway bar links part number 31 35 6 771 is allowed. Rear adjustable sway bar links part number 35 50 6 772 is allowed. Adjustable front camber plate part number 31 30 1 507 is allowed. Allow rear sway bar Progress #62.0210. *Allow part number 31226776162 (front) and 33416786552 (rear) bearings and corresponding brake rotors.*
Mini Cooper Paceman (R61) (11-16)	77.0 x 85.8 1598	2595	3.21, 1.79, 1.19, 0.91, 0.78, 0.68	4.72	(F) 11.0 (R) 10.2	2625	40mm flat plate restrictor required. Allow L/F Strut-spring assembly 31 31 1 126, R/F Strut-spring assembly 31 31 1 125, Rear Shock-spring assembly 33 50 1 125. Ride height measured from *the metal underneath* the bottom of the plastic door rocker molding shall be no less than 5 inches. Front adjustable sway bar links part number 31 35 6 771 is allowed. Rear adjustable sway bar links part number 35 50 6 772 is allowed. Adjustable front camber plate part number 31 30 1 507 is allowed. Allow rear sway bar Progress #62.0210. *Allow part number 31226776162 (front) and 33416786552 (rear) bearings and corresponding brake rotors.*
Mini Cooper Clubman (R55) (11-15)	77.0 x 85.8 1598	2547	3.21, 1.79, 1.19, 0.91, 0.78, 0.68	4.35	(F) 11.0 (R) 10.2	2625	40mm flat plate restrictor required. Allow L/F Strut-spring assembly 31 31 1 126, R/F Strut-spring assembly 31 31 1 125, Rear Shock-spring assembly 33 50 1 125. Ride height measured from *the metal underneath* the bottom of the plastic door rocker molding shall be no less than 5 inches. Front adjustable sway bar links part number 31 35 6 771 is allowed. Rear adjustable sway bar links part number 35 50 6 772 is allowed. Adjustable front camber plate part number 31 30 1 507 is allowed. Allow rear sway bar Progress #62.0210.
Mini Cooper Coupe (R58) (12-15)	77.0 x 85.8 1598	2466	3.21, 1.79, 1.19, 0.91, 0.78, 0.68	4.35	(F) 11.0 (R) 10.2	2625	40mm flat plate restrictor required. Allow L/F Strut-spring assembly 31 31 1 126, R/F Strut-spring assembly 31 31 1 125, Rear Shock-spring assembly 33 50 1 125. Ride height measured from the metal underneath the bottom of the plastic door rocker molding shall be no less than 5 inches. Front adjustable sway bar links part number 31 35 6 771 is allowed. Rear adjustable sway bar links part number 35 50 6 772 is allowed. Adjustable front camber plate part number 31 30 1 507 is allowed. Allow rear sway bar Progress #62.0210.
Nissan Micra Cup Cars (Canadian)	78.0 x 83.6 1598	2450	3.73, 2.05, 1.39, 1.03, 0.89	4.07	(F) 10.2 x 0.87 (R) 8.0 drum	2410	Suspension kit for the Micra Cup Series allowed.
Nissan Versa (07-11)	80.4 x 81.1 1797	2600	3.73, 2.11, 1.45, 1.17, 0.97, 0.81	3.93	(F) 11.02 x 0.95 (R) 9.0 drum	2750	35mm flat plate restrictor required.
Nissan Versa (09-11)	78.0 x 83.6 1598	2600	3.73, 2.05, 1.39, 1.03, 0.89	4.07	(F) 10.2 x 0.87 (R) 8.0 drum	2500	
Nissan Versa (2012)	78.0 x 83.6 1598	2600	3.73, 2.05, 1.39, 1.03, .089	4.07	(F) 10.2 x 0.87 (R) 8.0 drum	2490	

B-SPEC	Bore x Stroke (mm) Displacement (cc)	Wheelbase (mm)	Gear Ratios	Final Drive	Brakes (inches)	Weight (lbs)	Notes:
Nissan Versa (2013-)	78.0 x 83.6 1598	2600	3.73, 2.05, 1.39, 1.03, .089	4.07	(F) 10.2 x 0.87 (R) 8.0 drum	2550	
Nissan Versa Note (2013-)	78.0 x 83.6 1598	2600	3.73, 2.05, 1.39, 1.03, .089	4.07	(F) 10.2 x 0.87 (R) 8.0 drum	2550	Nissan shock kit part number: TBD, Nissan spring kit part number TBD.
Toyota Yaris Hatch (07-11)	74.9 x 84.6 1491	2461	3.55, 1.90, 1.31, 0.97, 0.82	3.72	(F) 10.0 (R) 7.9 drum	2400	PTR04-52061 TRD Sport shocks permitted. PTR11-52070 TRD springkit permitted. Speed sensor may be disconnected. Cold air intake K&N 69-8612TFK is allowed. Rear Swaybar PTR11-52071 is allowed. Allow Cusco Camber Plate 901 65R 015 for camber only adjustment.
Toyota Yaris *Hatch* (12-18)	74.9 x 84.6 1491	2510	3.55, 1.90, 1.31, 0.97, 0.82	3.72	(F) 10.0 (R) 7.9 drum	2400	Rear Swaybar PTR11-52071 is allowed. Cold air intake K&N 69-8612TFK is allowed.
Toyota Yaris Sedan (07-12)	74.9 x 84.6 1491	2550	3.55, 1.90, 1.31, 0.97, 0.82	3.72	(F) 10.0 (R) 7.9 drum	2400	Bilstein B14 47-237834 kit is allowed. Rear Swaybar PTR11-52071 is allowed. Cold air intake K&N 69-8612TFK is allowed.

Improved Touring Categories

Improved Touring

1. GCR

All automobiles must comply with ***Automobiles – General Regulations.***

2. Purpose

Cars will be Standard or Base models, as offered for sale in the United States, with no options. They will be prepared to manufacturers' specifications except for modifications permitted by these Rules. All cars not listed are classed as per their last MCSCC classification. If never classified, they MAY be considered for classification. Such classification shall be into a class where cars of a similar age and performance are classified. No station wagons will be allowed. Cars need not be eligible for State licensure or registration.

3. Intent

It is the intent of these rules to restrict modifications to those useful and necessary to construct a safe race car. Other than those items specifically allowed by these rules, no component or part normally found on a stock example of a given vehicle may be disabled, altered or removed for the purpose of obtaining any competitive advantage.

4. Specifications

The MCSCC shall publish Improved Touring Category Specifications (ITCS) containing the officially recognized specifications for each car eligible to compete in the Improved Touring Category during the calendar year. To maintain the stock basis of Improved Touring, updating and/or backdating of components is permitted only within cars of the same make, model, body type (e.g. sedan, station wagon, convertible, etc.), and engine size as listed on a single Improved Touring Specification page. Any updated/backdated components shall be substituted as a complete assembly (engine, long block, transmission/transaxle, induction system, differential/axel housing). No interchange of parts between assemblies is permitted, and all parts of any assembly shall be as originally produced for that assembly (such parts may, however, be painted or plated). Additionally, it is not permitted to "create" a model or type of car by updating or backdating assemblies. Parts or assemblies which the manufacturer lists in factory service manuals or parts guides for a particular model which supersede or replace original parts or assemblies must be supplied to MCSCC and appropriate part numbers listed on that particular model's specification page. Stock replacement parts may be obtained from sources other than the manufacturer provided they are the exact equivalent of the original parts. The intent of this rule is to allow the competitor to obtain replacement parts from standard industry outlets, e.g., auto-parts distributors, rather than from the manufacturer. It is not intended to allow parts that do not meet all dimensional and material specifications of new parts from the manufacturer. To establish the originality and configuration of the vehicle, each driver/entrant shall have a factory shop manual for the specific make, model and year of the automobile. This manual shall be presented when so requested at any technical inspection. If the factory shop manual is no longer available from the vehicle manufacturer, an aftermarket shop manual will be accepted with proof of non-availability from the manufacturer. Factory Shop/Service Manuals may come in the form of printed material, microfiche, CDs, DVDs and/or Internet access to manufacturer sponsored web-based database. It is the responsibility of the competitor to provide the electronic device capable of accessing the data for compliance verifications. The proof of legality shall rest upon the protestor and/or protestee. The MCSCC shall specify the minimum weigh for each classified car, as qualified or raced, with driver. If the weight of the vehicle is not listed in the ITCS, it shall be the driver's responsibility to provide the stock weight of the vehicle via the factory shop manual.

5. Authorized Modifications

The following modifications are authorized on all Improved Touring Category cars. Modifications shall not be made unless authorized herein. No permitted component/modification shall additionally perform a prohibited function.

6. Reciprocating Engines (only)

6.1 Any carburetor jets, needles, and/or metering rods may be used in the stock or approved optional carburetor(s). Alternate needle valves are permitted. Removable jets may be replaced or resized. The number of carburetors may not be changed from the standard. No venturi (including secondary or auxiliary of any carburetor may be modified in any way.

6.1.1 Certain cars have optional carburetor(s) listed. On these cars, adapter(s) may be used to mount the optional carburetor(s), provided the adapter serves no performance function, i.e., plenum chamber, etc.

6.1.2 External throttle linkage to the standard or optional carburetor(s) may be modified or changed. Choke mechanisms, plates, rods, and actuating cables, wires, or hoses may be removed. Method of operating the secondary throttle may be modified.

6.1.3 The original, standard intake manifold shall be maintained. No porting or polishing of the manifold is permitted except as allowed by Section ***6.12***, ***6.12.1***.

6.1.4 All air entering the intake tract shall pass through the carburetor or original fuel injection air inlet or factory equivalent replacement and original air metering device or factory equivalent replacement. Air intake source shall be within the confines of the engine compartment or stock location. For engines that have PCV fumes vented into the intake manifold runners, those orifices shall be plugged and the PCV emissions shall be vented per IT spec rules.

6.1.5 All single-carbureted cars may fit an approved optional carburetor. Approved/optional carburetors are:

Weber 32 DGV/DGAV/DGEV
Weber 32/36 DGV/DGAV/DGEV
Weber 32/36 DFV/DFAV/DFEV
Weber 34 DAT/DATR/DATRA/DMTR
Holley-Weber 5200

Carburetor(s) with swaged fuel inlet fitting shall be replaced by drilling and tapping the carburetor body for a threaded fitting. Fuel injection manifold(s) shall not be replaced with carburetor manifold(s) from a different model, type, or engine size in order to fit an optional carburetor. All cars equipped with multiple carburetors shall run the original induction system, except for modifications allowed by sections ***6*** through ***6.1.5*** above.

6.1.6 The engine management computer may be altered or replaced. A throttle position sensor and its wiring may be added or replaced. A MAP or MAF sensor and its wiring may be added. The stock oxygen sensor and its associated wiring may be altered, moved, or removed. Any oxygen sensor of alternate design (i.e. wideband vs. narrow band) and its associated wiring may be added. Other existing sensors, excluding the stock air metering device, may be substituted for equivalent units.

6.2 Any fuel pump(s)/filter(s) may be used. Pump(s) may be relocated, but shall not be located in the driver/passenger compartment. If a mechanical pump is replaced, a blanking plate may be used to cover the original mounting location. Fuel line(s) may be replaced, relocated, and given additional protection. If the relocated line(s) passes through the driver/passenger compartment, it/they shall be metal or metal braided, and shall be securely fastened. An external fuel pump pressure regulator may be installed.

6.3 Air intake hoses, tubes, pipes, resonators, intake mufflers, housings, etc., located ahead of the carburetor/throttle body may be removed or substituted. On cars so equipped, the air metering/measuring device (i.e. air flow meter, air mass meter, MAF) must be operational and shall not be modified.

6.4 Air cleaner assemblies may be modified, removed or replaced. Velocity stacks, ram air or cowl induction are not permitted unless fitted as original equipment.

6.5 Exhaust emission control air pumps, associated lines, nozzles and electrical/mechanical EGR devices may be removed. If such items are not removed, they may not be modified in any way. If EGR devices/nozzles are removed from a cylinder head or manifold, any holes remaining must be completely plugged. Water to an intake manifold may be blocked or removed as part of the emission system.

6.5.1 If fitted, catalytic converter(s) may be removed.

6.5.2 Those vehicles which have emission control devices removed and which are not registered and licensed for street operation may use any gasoline meeting the requirements of GCR ***Automobiles General Regulations***, Section 2 (Fuel).

6.5.3 Those vehicles registered and licensed for street use shall use the fuel specified by the workshop/owner's manual.

6.6 Any ignition system which utilizes the original distributor for spark timing and distribution is permitted. Internal distributor components and distributor cap may be substituted. Crankfire ignition systems are prohibited unless fitted as original equipment. Batteries may be replaced with those of alternate manufacture provided they are of similar amp-hour capacity and weight and are fitted in the standard location. Additional battery hold down devices may be used, and are strongly recommended. Cars originally equipped with two (2) 6 volt batteries may replace them with one (1) 12 volt battery installed in either one of the original battery locations.

6.7 Cars originally equipped with the plastic/phenolic timing gears may substitute metal gears, provided that the design, dimensions, and cam timing remain as stock. Adjustable timing gears are prohibited on all cars unless fitted as stock.

6.8 Any exhaust header and exhaust system may be used. Exhaust shall exit behind the driver, and must be directed away from the car body. Original exhaust system heat shields may be removed. A suitable muffler may be necessary to meet sound control requirements.

6.9 Oils pans, pan baffles, scrapers, and windage trays, oil pickups, lines, and filters are unrestricted. Oil and power steering hoses may be replaced with s metal braided hose (e.g. Aeroquip). A pressure accumulator/"Accusump" may be fitted. The location of the filter and the accumulator are unrestricted, but they shall be securely mounted within the bodywork. All oil lines that pass into or through the driver/passenger compartment shall be metal or metal-braided hose. Dry sump systems are prohibited unless fitted as standard equipment. Engine oil and oil additives are unrestricted.

6.10 Oil catch tanks are permitted. All engine breathers or vapor recirculation lines, if disconnected, shall vent to a catch tank of one (1) quart minimum capacity. Such catch tanks must not be mounted in the driver/passenger compartment. Original valve cover(s) may be modified to alter or to add breather/filler.

6.11 Engines may be bored to a maximum of 0.040 inch over standard bore size. Factory oversize replacement pistons or their **exact equivalent** shall be used. Equivalent pistons shall provide the same dome/dish/valve relief configuration, ring thickness and spacing, pin height relationship, weight, and compression ratio as factory replacement oversize pistons. Piston rings are unrestricted.

6.12 Balancing and "blueprinting" of the engine assembly are permitted. Lightening of parts beyond the minimum material removal necessary to balance is prohibited.

6.12.1 Manifold and cylinder head port matching is permitted. No material may be removed further than one (1) inch in from the manifold and/or cylinder head mounting face(s). Carburetor mounting surface(s) may not be modified, and external dimensions of the cylinder head or intake manifold may not be reduced to facilitate internal porting. Two piece manifolds are not intended to be port matched at their intermediate point.

6.13 Valve guide material is unrestricted.

6.14 Where a factory specification for original cylinder head thickness can be proven, a tolerance of 0.025 inch less than the maximum specifications will be permitted. Under no circumstance may the compression ratio be increased by more than one-half (0.5) a point (e.g. 8.0 to 8.5). An offset key may be used, on the crankshaft only, to return cam timing to the factory specifications.

6.15 Any clutch disc and pressure plate of stock diameter may be used, provided that they shall be bolted directly to an unmodified stock flywheel. Balancing of the flywheel/clutch pressure plate assembly is permitted. Lightening of the flywheel beyond the minimum material removal necessary to balance is prohibited. The addition of an external scattershield is permitted and recommended.

6.16 Alternate water pump, alternator, power steering, and crankshaft pulleys of any diameter or material may be used. Type of accessory drive (e.g. V-belt, toothed belt, etc) shall remain as stock.

6.17 Hardware items (nuts, bolts, etc.) may be replaced with similar items performing the same fastening function(s). Cylinder head gasket(s) may be replaced with any gasket(s) having the same compressed thickness as stock. Other engine gaskets are unrestricted. Engine drive belts may be replaced with others of equivalents OEM specifications.

6.18 All engine components not otherwise listed in these rules shall meet factory specifications for stock parts. Where factory specifications are absent or unclear, e.g., cylinder head thickness and/or combustion chamber depth, etc. The MCSCC may establish an acceptable dimension and/or allowable tolerance from stock. Engine compartment cosmetic trim pieces may be removed. Sections ***6.1*** – ***6.12*** and ***6.15*** – ***6.21*** also apply.

6.19 The applications and/or use of any painting, coating, plating or impregnating substance (i.e. anti-friction, thermal barrier, oil shedding coatings, chrome, anodizing, etc.) to any integral engine surface including intake manifolds is prohibited.

6.20 One (1) engine stay rod may be added.

7. Rotary Engines (only)

7.1 Any porting or polishing is prohibited.

7.2 Rules ***6*** and ***6.1.5*** also apply.

7.3 Crankshaft pulley is unrestricted.

7.4 Alternate rotor seals and springs are permitted.

7.5 Shift lever may be bent above the tunnel or floor.

8. Engine Cooling System

8.1 Any radiator may be used, provided it can be mounted in the original location, maintains the same plane as the original core and requires no body or structure modifications to install. No new opening(s) created by the fitting of any alternate radiator may be used for the purpose of ducting air to the engine. Catch and/or expansion tanks may be added or substituted.

8.2 Oil cooler(s) may be added or substituted. Location within the bodywork is unrestricted, provided that it/they are not mounted within the driver/passenger compartment.

8.3 Cooling fans may be removed or replaced. Electrically operated fans with manual or automatic actuation may be fitted.

8.4 Thermostats may be modified, removed or replaced with blanking sleeves or restrictors.

8.5 Climate control systems may be removed in whole or in part.

8.6 Screens of ¼ inch minimum mesh may be mounted in front of the radiator and/or oil cooler(s) and contained within the bodywork.

8.7 Engine coolant fluid, coolant/heater hoses and clamps may be substituted. Heater hoses may be plugged or bypassed (looped) or removed. Heater water control valve(s) may be added or substituted. Heater core may be removed.

9. Transmission/Final Drive

9.1 Any final drive ratio is permitted provided it fits the stock differential/transaxle housing without modification to the housing.

9.2 Any limited-slip or locked differential is permitted.

9.3 No alteration to the stock transmission gear ratios for the make, model, type and engine size of automobiles is allowed.

9.4 Hardware items (nuts, bolts, etc.) may be replaced by similar items performing the same fastening function(s).

10. Chassis

10.1 Ride Height

Minimum ride height is five (5) inches, to be measured without driver at the lowest point of the rocker panel, but not to include welded seams or fasteners.

10.2 Springs and Shock Absorbers

10.2.1 McPherson strut-equipped cars may substitute struts, and/or may use any insert. On cars where the strut assembly also serves to locate a spring, the lower spring seat must be permanently welded to the strut. Spring seat ride height location may be altered from stock.

10.2.2 Springs of any origin may be used, provided they are of the same number and type as originally fitted, i.e., coil, leaf, torsion bar, and that they shall be installed in the original location using the original system of attachment. Shackles or spacers may be used to adjust the leaf spring ride height. Spacers, including threaded units with adjustable spring seats, may be used with coil springs. Coil over threaded body shock/struts are permitted.

10.2.3 Spacers or lowering blocks may be used between leaf springs and the point(s) of attachment to the axle housing. The joining of two or more coil springs by any means is prohibited. The use of tender springs (designed to capture the spring within the perches at full droop) are permitted provided the tender springs are completely compressed when the car is at static ride height.

10.3 Suspension Control

10.3.1 Any anti-roll bar(s), traction bar(s), panhard rod or watts linkage may be added or substituted, provided its/their installation serves no other purpose. The mounts for these devices may be welded or bolted to the structure of the

vehicle. No suspension control mount or component shall be located in the trunk or driver/passenger compartment unless installed by the manufacturer as original equipment. Traction bars used to control axle rotation shall be a one piece solid car or tube. Heim rod ends may be fitted.

10.3.2 On those cars where an anti-roll bar also acts as a suspension locating device, the diameter of the bar may be changed. Bar attachment and pivot points on the chassis and control arms shall remain as stock, except as provided for in these Rules, Sections ***10.4.1*** and ***10.4.3***.

10.4 Suspension Mounting Points

10.4.1 Cars equipped with McPherson strut suspension may decamber wheels by the use of eccentric bushings at control arm pivot point, by the use of eccentric bushings at the strut-to-bearing-carrier joint, and/or by use of slotted adjusting plates at the top mounting point. If slotted plates are used, they shall be located on existing chassis structure and may not serve as a reinforcement for the structure. Material may be removed from the top of the strut tower to facilitate installation of adjuster plates.

10.4.2 On other forms of suspension, camber adjustment may be achieved by the use of shims and/or eccentric bushings.

10.4.3 All forms of suspension may adjust caster by means of shims or eccentric bushings. Additionally, McPherson strut-equipped cars may adjust caster at the upper strut mounting point/plate.

10.4.4 Independent rear suspension mounting holes may be slotted and reinforced for purpose of camber and/or toe adjustment. Material may be removed from the top of the strut tower to facilitate installation of adjuster plates.

10.4.5 Car may add two (2) front stayrod, located in the following areas:

10.4.5.1 Between the lower suspension mounting points.

10.4.5.2 Between the upper strut towers on McPherson strut equipped cars.

10.4.5.3 Between the upper front shock absorber mounts on cars with other forms of suspension.

10.4.6 Bushing material, including that used to mount a suspension subframe to the chassis, is unrestricted.

10.4.7 Rubber bump stops may be removed, but their chassis mounts, brackets, etc., may not be altered in any way.

10.4.8 No other relocation or reinforcement of any suspension component or mounting point is permitted.

10.4.9 Hardware items (nuts, bolts, etc.) may be replaced by similar items performing the same fastening function(s).

11. Brakes

11.1 Brake pads, brake linings, and brake fluid are unrestricted

11.2 Backing plates and dirt shields may be ventilated or removed. Air ducts may be fitted to the brakes, provided that they extend in a forward direction only, and that no changes are made in the body/structure for their use. Brake rotors and drums shall not be modified other than for truing within the manufacturer's specifications.

11.3 Brake lines may be replaced with steel lines or Teflon lined metal braided hose. Lines/hoses may be relocated and may be given additional protection. Brake fittings, adapters and connectors are unrestricted. Brake system circuitry may be revised, but no modification or substitution of the original master cylinder, its location, or mounting is permitted.

11.4 Brake proportioning valves may be used provided that they are of the in-line, pressure limiting type.

11.5 Parking brakes, mechanisms and actuating components may be removed.

11.6 Cars with ABS must disable the ABS system and may remove the ABS system and its components OR retain the original OEM, unmodified ABS system with the weight penalty (increase) per the schedule below:

Class	Additional Weight Required
ITR and ITS	0 %
ITA and ITB	2 %

11.7 ITGT Brake Modifications

11.7.1 Front Brake System

11.7.1.1 Rotors shall not exceed thirteen (13) inches.

11.7.1.2 Vehicle with 4 lug rotors may be replaced with 5 lug rotors.

11.7.1.3 Braking system may be replaced with a system listed in the SCCA American Sedan or the MCSCC ***American Grand Sport Specifications*** for the same Make and Model.

11.7.1.4 Braking system may be replaced with any system that uses the same brake pad as the Wildwood Dynalite caliper, or Superlite, without any modifications to the caliper of pad.

11.7.2 Rear Brakes System

11.7.2.1 Rotors shall not exceed twelve (12) inches.

11.7.2.2 Vehicle with 4 lug rotors may be replaced with 5 lug rotors.

11.7.2.3 Braking system may be replaced with a system listed in the SCCA American Sedan or the MCSCC ***American Grand Sport Specifications*** for the same Make and Model.

11.7.2.4 Braking system may be replaced with any system that uses the same brake pad as the Wildwood Dynalite caliper, without any modifications to the caliper or pad.

11.7.2.5 Rear drums may be replaced with a system meeting ***11.7.2.3*** or ***11.7.2.4***.

12. Wheels/Tires

12.1 Any wheel/tire may be used within the following limitations:

12.1.1 Cars originally equipped with twelve (12) inch wheels my fit thirteen (13) inch wheels. Cars originally equipped with metric 365 wheels may fit up to fourteen (14) inch wheels, and cars originally equipped with metric 390 wheels may fit up to fifteen (15) inch wheels. The above mentioned cars as well as those cars originally equipped with thirteen (13) inch or fourteen (14) inch wheels may fit up to fifteen (15) inch wheels. All other cars shall retain the wheel diameter

fitted as original equipment for their make, model, and type. Knockoff/quick change type wheels are prohibited. Wheels must be made of metal.

12.1.2 Any DOT-approved tire is permitted. Racing, recapped, or regrooved tires are not allowed. Tire size is unrestricted. The only modifications allowed to tires are having treads "shaved" or "trued".

12.1.2.1 ITD may use non-DOT-rated 13-inch Goodyear Spec Racer Ford Tires.

12.1.3 Track may be changed to accommodate larger tires, provided that there is safe tire/fender/chassis clearance under all conditions of steer, bump and rebound. Wheel spacers are permitted.

12.1.4 Tire tread (that portion of the tire that contacts the ground under static conditions) shall not protrude beyond the fender opening when viewed from the top perpendicular to the ground.

12.1.5 Any wheel stud, bolt, and/or nut are permitted.

12.1.6 Maximum allowable tire section width shall be 275mm.

12.1.7 Maximum allowable rim widths:

12.1.7.1 ITGT

12.1.7.1.1 Automobiles shall be allowed one (1) inch increase in rim width from the stock width, to a maximum of nine (9) inches.

12.1.7.1.2 Automobiles with different rim widths front to rear shall maintain this difference.

12.1.7.1.3 Automobiles with OEM rims wider than nine (9) inches shall maintain the stock rim widths.

12.1.7.2 ITS and ITA – seven (7) inches.

12.1.7.3 ITB, ITC, and ITD – six (6) inches.

13. Body/Structure

13.1 Fenders and wheel openings must remain unmodified. It is permitted to roll under or flatten any interior lip on the wheel opening for tire clearance. Cars with plastic/composite fenders may remove any interior wheel opening lip, but the resulting material edge shall be no thinner than the basic fender material thickness. Non-metallic inner fender liners may be removed.

13.2 A front spoiler/air dam is permitted. It shall not protrude beyond the overall outline of the body when viewed from above perpendicular to the ground or aft of the forward most part of the front fender opening. This body outline does not include bumpers or bumper mounts. The spoiler/air dam shall be mounted to the body, and may extend no higher than four (4) inches above the horizontal centerline of the front wheel hubs. It shall not cover the normal grill opening(s) at the front of the car. Openings are permitted for the purposes of ducting air to the brakes, cooler, and radiator. Where an air dam/spoiler is used, two total openings may be cut in the front valance to allow the passage of up to three (3) inch diameter duct leading to each front brake/rotor assembly. Where no air dam/spoiler used, two total openings of a maximum size five (5) inches by seven (7) inches may be cut in the front valance so that brake ducts can be added with a three (3) inch diameter hose leading to each front brake/rotor assembly. These openings shall serve no other purpose. Dealer installed or limited production front/rear spoilers/air dams/wings are prohibited. The spoiler shall have no support or reinforcement extending aft of the forward most part of the front fender opening. Note: Integrated bumper assemblies are defined as those designs where an external nonmetallic bumper cover completely encloses the primary energy-absorbing bumper and where this cover could be installed in its normal position with the underlying bumper removed. On cars with integrated bumpers, the front spoiler or airdam may be attached to the bumper cover.

13.3 No part of the car, except for the exhaust system and suspension components, shall be lower than the lowest part of the wheel rims.

13.4 Windshield clips and rear window straps per the GCR ***GT Specifications*** Section ***7.3.4.2*** are permitted and recommended.

13.5 Hood and trunk pins, clips, or positive-action external latches are permitted. Stock hood and truck latches may be disabled or removed; if so, some positive-action external fastening method shall be used. Engine compartment insulation may be removed.

13.6 Convertible tops and attaching hardware shall be completely removed. **Note**: Convertible model cars are only permitted if they were only available as convertibles (e.g., MG Midget.) Components (motors, cables, rails) may be removed provided the panel is securely retained. Hardtops may be retained if bolted in or removed completely.

13.7 Sunroofs and T-Tops

13.7.1 Manual and electric sunroofs, original or aftermarket, where the panel is not glass and not normally removable may be retained and run in the closed position.

13.7.2 Glass sunroof panels must be removed.

13.7.3 Removable sunroof or T-top panels may be retained if bolted in or removed completely.

13.7.4 All sunroofs may be replaced with a panel or replacement skin of the same material as the original surrounding roof material or a metallic panel may be used.

13.7.5 Components (motors, cables, rails) may be removed provided the panel is securely retained

13.8 Any paint scheme and markings meeting GCR ***Automobile General Regulations*** Section ***4*** are permitted.

13.9 All chassis/structural/electrical repair, if performed, shall be in concurrence with factory procedures, specifications and dimensions. Unless specifically authorized by the manufacturer for repair or allowed by these Rules, no reinforcement, i.e., seam welding, material addition, etc., is permitted.

13.10 Body repair must be performed using every reasonable effort to maintain stock body contours, lips, etc. Any body repair modification having as its sole purpose increased clearance is prohibited. In those circumstances where stock trim/molding pieces are unavailable through all normal replacement channels, proof of such unavailability shall be provided by the competitor. Cars shall meet the requirements of GCR ***Automobiles General Regulations***, Section ***9.3.2***, Appearance at all times.

13.11 All door windows must be fully lowered during competition.

13.12 Radio antennas may be removed. Antennas for two-way radios may be added.

13.13 Body side moldings, rocker panel moldings and wheel opening trim (not stock flares) may be removed. Resulting holes may be filled.

13.14 Allow a maximum of 2 jacking points to be reinforced. The reinforcement may serve no other purpose, each reinforcement may not exceed 12 x 6 x 6 inches in size and the reinforcement shall not be lower than the minimum ride height.

14. Driver/Passenger Compartment/Trunk

14.1 The driver and passenger seats may be replaced with any seat suitable for competition, including a racing-type bucket seat, meeting the general automobile regulations. Factory seat tracks/brackets may be modified, reinforced and/or removed to facilitate replacement mountings provided they perform no other function. All driver's seats shall be firmly mounted to the structure of the car and to the main hoop of the roll cage or the design of the seat and/or additional device may be used. Seats homologated to and mounted per FIA standard 8855-1999 need not utilize a seat back brace. Homologations labels must be visible.

14.2 Any steering wheel except wood rimmed types may be used. Any shift knob may be used.

14.3 Gauges, instruments and/or switches may be added, replaced, or removed. They may be installed in the original instrument(s) location using a mounting plate(s), or any other location using a secure method of attachment. Other than modification made to mount these items and provide for roll cage installation, the remainder of the dash "board" or panel shall remain intact.

14.4 Any interior or exterior mirrors may be used.

14.5 Front passenger seat, rear seatback, rear seat bottom cushion(s), sun visors, and their attaching hardware and bracketry may be removed. In those automobiles where the rear seatback provides the only solid bulkhead between the driver/passenger compartment and an exposed stock gas tank, a metal bulkhead completely filling the exposed seatback opening must be installed.

14.6 In those automobiles where rear seatback removal does not expose the stock gas tank directly to the driver/passenger compartment, a metal (only) bulkhead is optional.

14.7 Carpets, center consoles, floor mats, headliners, sun roof liner and frame, dome lights, grab handles, and their insulating, attaching or operating mechanisms may be removed. Sound deadening (melt sheets) and undercoating may be removed. Front door windows and their operating mechanisms may be removed. All other interior trim panels, except the dashboard, may be removed. Door interior trim panels may be removed or replaced with 0.060 - 0.065" aluminum securely attached to the door. Other than to provide for the installation of required safety equipment or other authorized modifications, no other driver/passenger compartment alterations or gutting are permitted.

14.7.1 Other gutting of the door shall only be made to the driver's door and shall only be made if the roll cage incorporates NASCAR-style side protection extending into the door.

14.8 Any removable covers used to cover spare tires, tools, bins, etc., may be removed alone with attaching hardware and bracketry. Carpets, mats and their insulating or attaching materials may be removed from the floor and recesses of the cargo/trunk/spare tire area.

14.9 Dead pedal/foot rest and heel stop may be added.

14.10 Ducting may be added to provide fresh air to the drivers/passenger compartment. This ducting shall be located in the driver and/or passenger window area, with no modification to the bodywork. Only the cooling duct is permitted in the window area. It is not permitted to otherwise fill in the window area.

14.11 Radio receivers may be removed or replaced. Two-way radios are permitted.

14.12 Modifications may be made to the foot pedals to improve the comfort of and control accessibility to the driver.

14.13 Windshield washer systems, rear windshield wiper systems, cruise control systems, horns and the wiring associated with any of these may be removed. Any holes left in the body must be covered plugged.

14.14 Power steering systems may be disabled or removed in whole or in part. Hydraulic hoses may be looped and a reservoir added for depowered racks. Electric systems may be disconnected. Openings in the mechanical steering system created by this allowance may be plugged or filled. Any vehicle equipped with power steering as originally fitted by the manufacturer may not be modified except where allowed by these rules.

15. Safety

15.1 All ITGT automobiles are required to fit a roll cage per ***Appendix ZZ*** with a maximum of eight mounting points. On cars where the rear window/bulkhead prohibits the installation of rear braces (Porsche 914, Pontiac Fiero), the main hoop shall be attached to the body by plates welded to the cage/bar and bolted to the stock shoulder harness mounting points. This installation design must also incorporate a diagonal bar connecting the top of the main hoop to the lower front passenger side mounting point ("Petty Bar"). Alternatively, the rear window may be removed and a clear, Plexiglas replacement installed. The rear cage braces may pass through this replacement window and through the engine cover or bodywork to allow connection to the frame or unibody. Such allowance shall be noted on the car's specification page.

15.1.1 The cage need not be removable. It shall be bolted and/or welded to the car, and shall be constructed of mild steel tubing only (no alloys).

15.1.1.1 Mounting plates shall be welded or bolted to the car.

15.1.1.2 Each mounting plate shall be at least 0.080" thick if welded and 3/16" thick (with appropriate backing plates) if bolted. There shall be a minimum of three (3) bolts per mounting plate.

15.1.1.3 Each mounting plate shall not be greater than 100 square inches and shall be no greater than 12 inches or less than 2 inches on a side.

15.1.1.4 Whenever possible, mounting plates shall extend onto a vertical section of the structure (such as a rocker box.)

15.1.1.5 Mounting plates may be multi-angled but must not exceed these dimensions in a flat plane.

15.1.1.6 Any number of tubes may attach to the plate or each other.

15.1.2 It shall attach to the car at no more than eight (8) points, consisting of the basic cage with six (6) points and two (2) additional braces.

15.1.3 The forward part of the cage shall be mounted at the rear shock mounts/towers or suspension pickup points. Such rear braces may be mounted, one on either side, from the forward section of the cage to the firewall or front fender wells. No braces may pass through the front firewall.

15.1.4 Main hoop braces may be mounted at the rear shock mounts/towers or suspension pickup points. Such rear braces may pass through any mandatory or optional bulkhead or panel separating the driver/passenger compartment from the trunk/cargo area/fuel tank/fuel cell area, provided the bulkhead is sealed around said cage braces.

15.1.5 A lateral, diagonal main hoop brace illustrated in drawing No. 7, ***Appendix Z*** is required. Any number of additional reinforcing bars are permitted within the structure of the cage, providing they meet the minimum tubing size per ***Appendix Z*** and/or ***Appendix ZZ***. Such reinforcing tubes may pass through any mandatory or optional bulkhead or panel separating the driver/passenger compartment from the trunk/cargo area/fuel tank/fuel cell area, provided the bulkhead is sealed around such reinforcing tubes.

15.2 Steering lock mechanisms shall be removed.

15.3 The stock fuel tank may be replaced with a fuel cell. The fuel cell shall be located within twelve (12) inches of the original fuel tank location. Additional reinforcement may be added to support the fuel cell, but such reinforcement shall not attach to the roll bar/cage. Floor pan may be modified for installation. See ***Appendix X***.

15.4 Exposed headlights, parking lights and side marker lights shall be taped. OEM light assemblies mounted on or below (but not in) the bumpers shall be removed.

15.5 Spare Wheels and tires may be removed.

15.6 Airbags shall be disarmed and may be removed.

15.7 Hand controls are allowed in those instances where the driver can demonstrate the physical need for them.

16. Other Eligibility

16.1 Automobiles eligible and prepared to the B-spec category may also compete as ITB cars as long as they meet all the requirements of the B-spec rules.

16.1.1 The only exception to 16.1 is that they can use the IT tire rule as defined in 12.1.2.

17. Improved Touring GT Specifications

Year	Manufacturer	Model	Disp.	Weight (lbs)
79-83	AMC	Spirit	304cid	3180lbs
87-91	BMW	M3 (E30)	2.3L	2700lbs
00-06	BMW	330i (E46)	2979 cc	3000 lbs
07-13	BMW	330i (E90/92)	2996 cc	3250 lbs
94-96	Chevrolet	Caprice/Impala SS	350cid	3500lbs
82-92	Chevrolet	Camaro	5.0L	3180lbs
82-03	Chevrolet	Camaro	5.7L	3500lbs
84-91	Chevrolet	Corvette	350cid	3600lbs
86-89	Chrysler	Conquest	2555cc Turbo	2900lbs
83	Datsun	280ZX	Turbo	3180lbs
79-93	Ford	Mustang	302cid	3025lbs
83-87	Ford	Mustang	302cid	3025lbs
84-86	Ford	Mustang SVO	2300cc Turbo	2900lbs
85-90	Ford	Mustang GT	302cid	3070lbs
87-90	Ford	Mustang LX	302cid	3070lbs
93	Ford	Mustang Cobra	302cid	3300lbs
00-03	Honda	S2000	1997cc	2800lbs
04-09	Honda	S2000 (incl CR)	2157cc	2800lbs
84-86	Maserati	Biturbo E	2.5L V6	3180lbs
86-91	Mazda	RX-7	2616cc Turbo	2775lbs
79-86	Mercury	Capri	302cid	3025lbs
79-86	Mercury	Capri RS	302cid	3075lbs
06	Mitsubishi	EVO RS	1997cc	3595lbs
84-88	Nissan	300ZX	2960cc Turbo	3025lbs
75-80	Oldsmobile	Starfire		
82-92	Pontiac	Firebird	5.0L	3180lbs
82-03	Pontiac	Firebird	5.7L	3350lbs
85-87	Porsche	944	Turbo	3015lbs
87-88	Porsche	944S	16V	2955lbs
89	Porsche	944S2	2990cc	3015lbs
92-95	Porsche	968	2990cc	2985lbs
86	Toyota	Celica GTS 4WD	2.0L16Valve	2625lbs
91-92	Toyota	MR-2	1988cc Turbo	2650lbs
87-90	Toyota	Supra	Turbo	3675lbs

18. Improved Touring R Specifications

Year	Manufacturer	Model	Disp.	Weight (lbs)
97-01	Acura	Integra Type-R	1797cc	2415lbs
02-06	Acura	RSX-S	1988cc	2535lbs
04-08	Acura	TSX	2345cc	2655lbs
92-95	BMW	325i/is	2494cc	2765lbs
01-06	BMW	325i/ci	2494cc	2765lbs
96-99	BMW	328i/is	2793cc	2715lbs
99-00	BMW	328i/ci	2793cc	2825lbs
01-06	BMW	330i/ci excl. ZHP	2979cc	3215lbs
88-91	BMW	M3	2302cc	2595lbs
97-00	BMW	Z3 (all)	2793cc	2675lbs
01-02	BMW	Z3 (all)	2979cc	3090lbs
03-06	BMW	Z4	2494cc	2650lbs
83-86	Chevy	Camaro	5000cc	2760lbs
87-92	Chevy	Camaro incl. 1LE, excl. BC4	5000cc	3250lbs
96-02	Chevy	Camaro	3790cc	2745lbs
84	Chevy	Corvette	5700cc	2965lbs
98-00	Ford	Contour SVT	2544cc	2475lbs
86	Ford	Mustang GT	4942cc	2745lbs
89-93	Ford	Mustang excl. Cobra	4942cc	3185lbs
94-95	Ford	Mustang excl. Cobra	4942cc	3025lbs
96-98	Ford	Mustang	4601cc	3165lbs
99-04	Ford	Mustang	3797cc	2500lbs
05-07	Ford	Mustang	4010cc	2790lbs
89-95	Ford	Taurus SHO	2986cc	2725lbs
93-96	Honda	Prelude	2157cc	2460lbs
97-01	Honda	Prelude non-SH	2157cc	2520lbs
97-01	Honda	Prelude SH	2157cc	2580lbs
00-03	Honda	S2000	1997cc	2855lbs
04-09	Honda	S2000	2157cc	2855lbs
01-02	Lexus	IS300	2997cc	2905lbs
89-96	Nissan	300ZX	2960cc	3000lbs
87-92	Pontiac	Firebird incl. 1LE, excl. BC4	5000cc	3185lbs
96-02	Pontiac	Firebird	3790cc	2700lbs
69	Porsche	911S	1991cc	2200lbs
70-71	Porsche	911S	2195cc	2350lbs
72-73	Porsche	911S	2341cc	2480lbs
74-77	Porsche	911/911S/Carrera	2687cc	2285lbs
78-83	Porsche	911SC	2994cc	2430lbs
89-91	Porsche	944S2	2990cc	2645lbs
93-97	Porsche	968	2990cc	2760lbs
97-99	Porsche	Boxster	2480cc	2600lbs
00-02	Porsche	Boxster	2687cc	2810lbs
00-05	Toyota	Celica	1796cc	2305lbs
87-92	Toyota	Supra	2956cc	2725lbs
93-97	Toyota	Supra	2997cc	2970lbs

19. Improved Touring S Specifications

Year	Manufacturer	Model	Disp.	Weight (lbs)
92-93	Acura	Integra GSR	1687cc	2430lbs
94-00	Acura	Integra GS-R	1797cc	2590lbs
02-04	Acura	RSX-S	1988cc	3000lbs
05-06	Acura	RSX-S	1988cc	3200lbs
04-08	Acura	TSX	2345cc	3175lbs
81-86	Alfa Romeo	GTV 6	2492cc	2680lbs
87-89	Alfa Romeo	Milano	2.5L	2780lbs
98-00	BMW	323i	2494cc	3000lbs
87-91	BMW	325i/is	2494cc	2710lbs
92-95	BMW	325i/is	2494cc	2850lbs
	29mm SIR	required and must comply	to SCCA 17.1.2.F.4.i.10	
90-91	BMW	318is Twin Cam	1799cc	2600lbs
90-91	Chevy	Beretta GTZ w/ 15" rims	?	2756lbs
90-91	Chevy	Beretta GTZ w/ 16" rims	?	2781lbs
70-73	Datsun	240Z	2393cc	2430lbs
73-74	Datsun	260Z	2565cc	2480lbs
75-78	Datsun	280Z	2754cc	2505lbs
79-83	Datsun	280Z 2+2	2754cc	2530lbs
68-70	Datsun	SLR 311U	1982cc	2180lbs
88-90	Dodge	Shelby Daytona	2200cc Turbo	2830lbs
89-93	Ford	Taurus SHO	3000cc	3100lbs
95-00	Ford	Contour V6 non SVT	2544cc	2665lbs
93	Ford	Probe GT	2495cc V6 DOHC	2570lbs
94-98	Ford	Mustang LX V6	3797cc	2470lbs
99-00	Honda	Civic Si	1595cc	2430lbs
94-97	Honda	Civic del Sol VTEC	1595cc	2430lbs
92-93	Honda	Prelude	2259cc	2555lbs
73-79	Jensen	Healey	1973cc	2240lbs
99-05	Mazda	Miata	1839cc	2375lbs
93	Mazda	MX6	2495cc V6 DOHC	2570lbs
86-91	Mazda	RX-7 13B	2616cc	2680lbs
06-15	Mazda	MX-5	1998cc	2740lbs
04-08	Mazda	RX-8	2600cc	3270lbs
09-11	Mazda	RX-8	2600cc	3270lbs
86	Mercedes Benz	190E 16V	2299cc	2800lbs
87-93	Mercedes Benz	190E	2600cc	2695lbs
99	Mercury	Cougar	2544cc	2650lb
84-88	Nissan	300ZX 2 Seat	2960cc	2725lbs
87	Nissan	200 SX V6	2960cc	2725lbs
91-94	Nissan	240SX	2389cc	2600lbs
95-98	Nissan	240SX (S14)	2389cc	2600lbs
92-93	Oldsmobile	Achieva SCX	2263cc	2655lbs
88-91	Oldsmobile	Calais	2300cc	2505 lbs
86-88	Porsche	924S	2476cc	2575lbs
83-88	Porsche	944	2479cc V8	2575lbs
89	Porsche	944	2.7L	2635lbs
82-85	Toyota	Supra	2759cc	2750lbs
86-92	Toyota	Supra	2954cc	3275lbs
80-82	Triumph	TR-8	3528cc	2610lbs
95-99	Volkswagen	Gold GTI VR-6	2782cc	2680lbs
93-94	Volkswagen	Corrado SLC	2782cc	2680lbs
94-96	Volkswagen	Jetta VR6	2782cc	2680lbs
93-97	Volvo	850 GLT	2435cc	2635lbs

20. Improved Touring A Specifications

Year	Manufacturer	Model	Disp.	Weight (lbs)
86-89	Acura	Integra	1.6L 16V	2200lbs
90-93	Acura	Integra	1835cc	2595lbs
94-00	Acura	Integra 3-door GS/LS/RS	1835cc	2620lbs
75-78	AMC	Gremlin	258cid 6 cyl	2530lbs
79-83	AMC	Spirit	4228cc	2730lbs
87	Audi	GT Coupe	2309cc	2230lbs
84-87	BMW	325 E/ES 2&4 door	2693cc	2550lbs
96-98	BMW	Z3 1.9	1895cc	2600lbs
90-91	BMW	318i/is	1799cc	2600lbs
92-94	BMW	318i E36	1796cc	2600lbs
71-74	BMW	2002tii	1990cc	2310lbs
75-80	Buick	Skyhawk	3786cc V6	2810lbs
95-02	Chevrolet	Cavalier coupe, 16 valve	2189cc	2640lbs
86-87	Chevrolet	Cavalier Z24	2800c	2480lbs
81-83	Chevrolet	Citation X-11	2837cc V6	2620lbs
68-69	Chevrolet	Corvair 140	2685cc	2580lbs
75-76	Chevrolet	Cosworth Vega	1998cc	2580lbs
78-80	Chevrolet	Monza	3786cc V6	2810lbs
95-99	Chrysler	Neon SOHC/ACR	1995cc	2345lbs
95-99	Chrysler	Neon DOHC/ACR	1995cc	2560lbs
90-94	Chrysler	Laser/Eagle Talon	1997cc	2500lbs
86	Dodge	Daytona	2501cc	2620lbs
84-86	Dodge	Omni GLH 2.2	2213cc	2430lbs
83-84	Dodge	Shelby Charger	2213cc	2290lbs
95-00	Dodge	Stratus	1995cc	2870lbs
98-00	Ford	Escort ZX2	1988cc	2400
2000-01	Ford	Focus ZX-3	1988cc	2400lbs
74-78	Ford	Mustang II	2799cc V6	2840lbs
79	Ford	Mustang III	2799cc V6	3000lbs
80-82	Ford	Mustang III L6	3300cc V6	2700lbs
89-91	Honda	Civic Si	1590cc	2250lbs
92-95	Honda	Civic Si	1590cc	2270 lbs
92-95	Honda	Civic EX Coup-1.6 VTEC	1590cc	2270 lbs
96-00	Honda	Civic EX Cpe/Sedan	1590cc	2305lbs
88-91	Honda	CRX Si	1590cc	2250lbs
93	Honda	Del Sol S	1493cc	2140lbs
93-97	Honda	Del Sol Si	1590cc	2270lbs
88-91	Honda	Prelude Si DOHC	1950cc	2550lbs
90-91	Honda	Prelude Si	2056cc	2550lbs
92	Honda	Prelude S	2156cc	2680lbs
83-87	Isuzu	Impulse	1949cc	2855lbs
76-78	Mazda	Cosmo	2616 cc	2780 lbs
92	Mazda	MX-3 V-6 DOHC	1844 cc	2510 lbs
90-93	Mazda	MX-5 Miata	1597cc	2255lbs
94-97	Mazda	MX-5 Miata, Miata R	1839cc	2460lbs
99-00	Mazda	Miata, Full Trim SM	1839cc	Per SM Rules
01-05	Mazda	Miata, Full Trim SM	1839cc	Per SM Rules
04-09	Mazda	3s	2260cc	2840lbs
02-03	Mazda	Protégé5	1991cc	2305lbs
01-03	Mazda	Protégé ES/LX	1991cc	2305lbs
95-98	Mazda	Protégé ES	1839cc	2325lbs
90-94	Mazda	Protégé LX	1839cc	2325lbs
71-74	Mazda	RX-2	2292cc	2300lbs

Improved Touring A Specifications (continued)

Year	Manufacturer	Model	Disp.	Weight (lbs)
71-74	Mazda	RX-2	2292cc	2300lbs
72-78	Mazda	RX-3	2292cc	2280lbs
72-78	Mazda	RX-3 SP	2292cc	2280lbs
74-78	Mazda	RX-4	2616cc	2550lbs
79-85	Mazda	RX-7 (12A)	2292cc	2280lbs
72-75	Mercury	Capri I 2.6, 2.8	2550 cc 2792 cc V6	2380lbs
76-77	Mercury	Capri II	2792cc V6	2670lbs
00-05	Mitsubishi	Eclipse RS/GS	2351cc I4	2700lbs
91-93	Nissan	NX2000	1998cc	2515lbs
91-94	Nissan	Sentra SE-R	1998cc	2490lbs
95-98	Nissan	200 SX SE-R	1998cc	2490lbs
75-80	Oldsmobile	Starfire	3786cc V6	2810lbs
85-88	Pontiac	Fiero GT V6	2837cc	2600lbs
75-80	Pontiac	Sunbird	3786cc V6	2910lbs
76	Porsche	912E	1971cc	2480lbs
91-92	Saab	900	2118cc 16V	2680lbs
91-97	Saturn	SC Coupe & SC2	1901cc	2360lbs
91-95	Saturn	SL2	1901cc	2360lbs
86-88	Toyota	Celica GTS	1998cc	2500lbs
79-81	Toyota	Celica Supra	2759cc	2930lbs
88-92	Toyota	Corolla GTS 16V	1587cc	2300lbs
85-89	Toyota	MR-2	1587 cc	2000 lbs
90-94	Toyota	MR-2	2164cc	2545lbs
70-74	Triumph	GT6 MK III	1998cc	2005lbs
69-76	Triumph	TR6	2498cc	2060lbs
91-92	Volkswagen	Gli	1984cc	2475lbs
93	Volkswagen	Golf III	1984cc	2185lbs
90-92	Volkswagen	GTI	2.0L 16V	2475lbs
87-89	Volkswagen	GTI 16V	1780cc	2185lbs
91-93	Volkswagen	Jetta III	1984cc	2480lbs
86-88	Volkswagen	Scirocco 16V	1780cc	2185lbs

21. Improved Touring B Specifications

Year	Manufacturer	Model	Disp.	Weight (lbs)
75-79	Alfa Romeo	GTV	1962cc	2520lbs
72-75	Alfa Romeo	GTV 2000	1962cc	2410lbs
75-79	Alfa Romeo	Alfetta GT	1962cc	2520lbs
75-79	Alfa Romeo	Alfetta Sedan	1962cc	2605lbs
87-94	Alfa Romeo	Spider	1962cc	2400lbs
72-89	Alfa Romeo	Spider 2000	1962cc	2400lbs
72-89	Alfa Romeo	Spring Veloce	1962cc	2520lbs
85-89	Alfa Romeo	Spider Quadrifoglio	1962cc	2400lbs
81-83	Audi	4000 5+5	2144cc	2490lbs
86	Audi	4000 & 4000S		2500lbs
81-86	Audi	Coupe	2144cc	2490lbs
68-76	BMW	2002	1990cc	2280lbs
84-86	BMW	318i	1767cc	2210 lbs
77-79	BMW	320i 2.0	1990cc	2340lbs
80-83	BMW	320i 1.8	1766cc	2210 lbs
95-02	Chevrolet	Cavalier Coupe, 8 valve	2189cc	2500lbs
72-77	Chevrolet	Vega	2287cc	2360lbs
78-81	Datsun	510 II	1952cc	2280lbs
73	Datsun	610	1770cc	2450lbs
74-76	Datsun	610	1952cc	2450lbs
77-79	Datsun	200SX/S10 (L20B)	1952cc	2350lbs
80-81	Datsun	200SX/S110 (Z20)	1952cc	2530lbs
82-83	Datsun	200SX/S110 (Z22)	2187cc	2705lbs
81-85	Dodge	Charger/024 2.2	2213cc	2320lbs
76-77	Dodge	Colt GT 2.0	1995cc	2280lbs
84-89	Dodge	Daytona	2213cc	2630lbs
89-91	Dodge	Shadow	2213cc	2680lbs
78-80	Dodge	Omni 1.7	1715cc	2280lbs
80-90	Dodge	Omni 2.2	2213cc	2290lbs
74-78	Fiat	124 Spider 1.8	1756cc	2230lbs
79-83	Fiat	124 Spider 2.0	1995cc	2330lbs
79-81	Fiat	Brava 2.0	1995cc	2530lbs
86-90	Ford	Escort GT 1.9	1859cc	2280lbs
86-88	Ford	Escort EXP	1859cc	2415lbs
		*Add 25lbs with	sequential gearbox*	
75-78	Ford	Mustang II 2.3	2301cc	2830lbs
79-93	Ford	Mustang III 2.3	2301cc	2550lbs
71-74	Ford	Pinto 2.0	1993cc	2230lbs
74-80	Ford	Pinto 2.3	2301cc	2340lbs
90	Geo	Prizm	1600cc	2455lbs
90-91	Geo	Storm	1600cc	2380lbs
79-83	Honda	Accord 1.7	1751cc	2270lbs
86-89	Honda	Accord Lxi	1955 cc	2550 lbs
89	Honda	Accord SE-I 4cyl SOHC	1955 cc	2550 lbs
92-95	Honda	Civic Dx	1493 cc	2050 lbs
86-87	Honda	Civic Si	1488 cc	1970 lbs
93-95	Honda	Civic Del Sol S	1493 cc	2345 lbs
88-91	Honda	Civic DX	1493 cc	2110 lbs
92-95	Honda	Civic DX	1493 cc	2345 lbs
84-87	Honda	CRX Si	1488 cc	1970 lbs
88-91	Honda	CRX	1493 cc	2030 lbs
83-87	Honda	Prelude 1.8	1829 cc	2350 lbs
83-87	Honda	Prelude II 1.8	1829cc	2350lbs
86-87	Honda	Prelude Si	1955cc	2450lbs
91	Isuzu	Stylus SX	1588cc	2430lbs
86-88	Mazda	323	1597cc	2060lbs
89	Mazda	323	1597cc	2190lbs

Improved Touring B Specifications (continued)

Year	Manufacturer	Model	Disp.	Weight (lbs)
79-82	Mazda	626	1970cc	2460lbs
83-84	Mazda	626 FWD	1998cc	2300lbs
94-96	Mazda	MX-3 RS	1597cc	2230lbs
88-91	Mazda	MX-6	2189cc	2530lbs
74-80	Mercury	Bobcat 2.3	2301cc	2520lbs
71-74	Mercury	Capri I 2.0	1993cc	2300lbs
79-86	Mercury	Capri III 2.3	2301cc	2550lbs
85-86	Mercury	Lynx 1.9	1859cc	2350lbs
68-80	MG	MGB	1785cc	2050lbs
68-74	MG	MGB GT	1786cc	2100lbs
84-86	Nissan	200 SZ/S12 (CA20)	1975cc	2530lbs
91-94	Nissan	Sentra	1597cc	2290lbs
71-75	Opel	1900 Sedan	1897cc	2180lbs
69-73	Opel	GT 1900	1897cc	2180lbs
71-75	Opel	Manta 1.9	1897cc	2230lbs
79-80	Plymouth	Firearrow	2555cc	2360lbs
78-80	Plymouth	Horizon/TC3	1716cc	2280lbs
80-90	Plymouth	Horizon	2213cc	2320lbs
81-85	Plymouth	TC3/Turismo	2213cc	2320lbs
84-88	Pontiac	Fiero	2471cc	2315lbs
74-75	Porsche	914 1.8	1795cc	2080lbs
73-76	Porsche	914 2.0	1971cc 4cyl	2260lbs
77-82	Porsche	924	1984cc	2495lbs
77-82	Porsche	924 Sebring	1984cc	2495lbs
87	Renault	Alliance GTA	1965cc	2140lbs
70-71	SAAB	99	1709cc	2637lbs
72	SAAB	99E	1854cc	2637lbs
73-80	SAAB	99EMS 2.0	1985cc	2540lbs
79-83	SAAB	900	1985cc	2680lbs
86-90	SAAB	900 16V	1985cc	2680lbs
89-94	Suzuki	Swift GA	1299cc	1735lbs
89-94	Suzuki	Swift GTi	1299cc	1895lbs
71-73	Toyota	Celica I 2.0L	1968cc	2350lbs
74-77	Toyota	Celica I 2.2	2189cc	2300lbs
78-80	Toyota	Celica II 2.2	2189cc	2430lbs
81-82	Toyota	Celica II 2.4	2366cc	2470lbs
83-85	Toyota	Celica III 2.4	2366cc	2350lbs
83-85	Toyota	Celica III GTS	2366cc	2425lbs
86	Toyota	Celica ST	1995cc	2480lbs
80-82	Toyota	Corolla 1.8	1770cc	2050lbs
84-87	Toyota	Corolla GTS 16V	1587cc	2285lbs
87-92	Toyota	Corolla AE92 Sedan Corolla SR5	1587cc	2150lbs
87	Toyota	FX16	1587cc	2240lbs
85-89	Toyota	MR-2	1587cc	2335 lbs
58-64	Triumph	TR-3A, -3B	2000cc	2300lbs
64-68	Triumph	TR-4, -4A (non IRS)	2000cc	2300lbs
76-81	Triumph	TR-7	1998cc	2420lbs
85-91	Volkswagen	Golf GTi/GT/GL	1780cc	2280lbs
87-89	Volkswagen	Golf GTi 16V	1780cc	2560lbs
85-91	Volkswagen	Jetta/Jetta GL/Gli	1780cc	2280lbs
83-84	Volkswagen	Rabbit GTI	1780cc	2080lbs
77-80	Volkswagen	Scirocco I	1715cc	2110lbs
83-88	Volkswagen	Scirocco	1780cc 8V, K-Jet	2080 lbs
86-88	Volkswagen	Scirocco 16V	1780cc	2560lbs

22. Improved Touring C Specifications

Year	Manufacturer	Model	Disp.	Weight (lbs)
95-02	Chevrolet	Cavalier, Coupe, 8 valve	2189cc	2640lbs
74-78	Datsun	B210	1397cc	2010lbs
68-73	Datsun	PL-510	1595cc	2170lbs
71-78	Dodge	Colt RWD	1597cc	2190lbs
79-84	Dodge	Colt FWD 1.6	1597cc	2040lbs
89-92	Dodge	Colt	1486cc	2270lbs
70-73	Fiat	124 Coupe	1592/1608cc	2200lbs
72-73	Fiat	124 Special TC	1592cc	2130lbs
70-73	Fiat	124 Spider	1592/1608cc	2170lbs
79-87	Fiat	X 1/9 Bertone	1498cc	2145lbs
68-70	Ford	Cortina GT	1598cc	1780lbs
81-85	Ford	Escort GT	1589cc	2100lbs
82-85	Ford	Escort EXP	1589cc	2130lbs
89	Geo	Spectrum	1481cc	2020lbs
90-93	Geo	Storm SOHC	1588cc	2355lbs
76-78	Honda	Accord 1.6	1599cc	2180lbs
75-79	Honda	Civic CVCC 1.5	1488cc	1820lbs
80-83	Honda	Civic CVCC 1.5	1488cc	1870lbs
84-87	Honda	Civic HB Sedan	1488cc	1955lbs
88-91	Honda	Civic Dx	1493cc	2140lbs
92-95	Honda	Civic CX	1493cc	2170lbs
84-87	Honda	CRX 1.5	1488cc	1955lbs
95-99	Hyundai	Accent GL&L	1495cc 12V	2000lbs
86-94	Hyundai	Excel	1469cc	2370lbs
76-82	Isuzu	I-Mark	1817cc	2280 lbs
81-84	Mercury	Lynx	1589cc	2100lbs
82-85	Mercury	LN7	1598cc	2130lbs
86-89	Mitsubishi	Mirage	1468cc	2270lbs
83-86	Nissan	Pulsar NX	1597cc	2080lbs
82-83	Nissan	Sentra Sedan	1488cc	1980lbs
82-83	Nissan	Sentra HB	1488cc	2100lbs
83-86	Nissan	Sentra Sedan	1597cc	1980lbs
83-86	Nissan	Sentra HB	1597cc	2100lbs
87-88	Nissan	Sentra B12 (E16)	1597cc	2180lbs
79-83	Plymouth	Champ FWD	1597cc	2040lbs
89	Plymouth	Colt	1468cc	2270lbs
70-73	Porsche	914 1.7	1679cc	2080lbs
83-87	Renault	Alliance	1400cc	2070lbs
84-87	Renault	Encore	1721cc FI	2100lbs
83-87	Renault	Encore	1400cc	2070lbs
83-84	Renault	Fuego	1647cc	2380lbs
71-74	Toyota	Corolla SR5	1588cc	2130lbs
75-79	Toyota	Corolla SR5	1588cc	2230lbs
83-87	Toyota	Corolla SR5	1587cc	2270lbs
98-99	Volkswagen	Beetle	1984cc	2760lbs
82-84	Volkswagen	Jetta	1715cc	2080lbs
75-80	Volkswagen	Rabbit	1588cc Carb	2000lbs
75-80	Volkswagen	Scirocco	1588cc	2040lbs
81-84	Volkswagen	Rabbit	1715cc	2050lbs
81	Volkswagen	Scirocco I	1715cc	2110lbs
82-84	Volkswagen	Scirocco II	1715cc	2110lbs
75	Volvo	242	1986cc	2570lbs
76-81	Volvo	242	2127cc	2570lbs
83-93	Volvo	240	2.3 l	2735 lbs
75	Volvo	244	1986cc	2570lbs
76-81	Volvo	244	2127cc	2570lbs

23. Improved Touring D Specifications

Year	Manufacturer	Model	Disp.	Weight (lbs)
68-69	Austin Healey	Sprite	1275cc	1615lbs
76-87	Chevrolet	Chevette 1.4	1400cc	2070lbs
76-87	Chevrolet	Chevette 1.6	1598cc	2130lbs
85-88	Chevrolet	Sprint	993cc	1500lbs
71-73	Datsun	1200	1171cc	170lbs
79-82	Datsun	210 1.4	1397cc	2080lbs
79-82	Datsun	210 1.5	1488cc	2080lbs
74-78	Fiat	X 1/9 1.3	1290cc	2090lbs
81-84	Ford	Escort	1589cc	2100lbs
78-80	Ford	Fiesta	1598cc	1780lbs
89-93	Ford	Festiva	1324cc	1870lbs
89-92	Geo	Metro	1100cc	1800lbs
73-79	Honda	Civic	1237cc	1710lbs
84-87	Honda	Civic	1300cc	1710lbs
84-87	Honda	CRX HF	1300cc	1710lbs
77-78	Mazda	GLC RWD	1272cc	2000lbs
79-80	Mazda	GLC RWD	1415cc	2080lbs
81-85	Mazda	GLC FWD	1490cc	2000lbs
68-74	MG	Midget 1275	1275cc	1615lbs
75-79	MG	Midget 1500	1493cc	1740lbs
83-85	Renault	Alliance	1397cc	2070lbs
83-86	Renault	Encore	1397cc	2070lbs
76-78	Renault	R5 LeCar	1289cc	1910lbs
79-84	Renault	R5 LeCar	1397cc	1910lbs
80-87	Subaru		1600cc	2000lbs
72	Subaru	GL Coupe	1300cc	1800lbs
73-74	Subaru	GL	1400cc	1900lbs
81-83	Toyota	Starlet	1290cc	1850lbs
68-70	Triumph	Spitfire MKIII	1296cc	1750lbs
73-80	Triumph	Spitfire	1493cc	1840lbs
70	Volkswagen	Beetle	1471cc	1880lbs
75	Volkswagen	Rabbit	1471cc Carb	1980lbs
78-80	Volkswagen	Rabbit	1457cc	1980lbs
75	Volkswagen	Scirocco	1471cc Carb	2110lbs
78	Volkswagen	Scirocco	1457cc CIS	2040lbs
71-78	Volkswagen	Super Beetle	1584cc	1970lbs
86	Yugo		1116cc	1850lbs

TC = Turbocharged SC = Supercharged IC = Intercooled
cc= Cubic Centimeter ci = Cubic Inch L = Liter
HB = Hatchback LB = Liftback
4V = 4 Valve 8V = 8 Valve 16V = 16 Valve

All cars recognized in MCSCC Improved Touring in previous years are also recognized. It is the duty of the competitor to keep prior rule book(s) to substantiate the legality of his/her car in its class.

24. Improved Touring J Specifications

24.1 Purpose
To allow Lemons, Chumpcar and American Endurance Racing cars to compete in Midwestern Council wheel to wheel sprint racing, endurance racing and other special racing events. This class is intended as a “fun class” with no performance equitability being made..

24.2 Specifications
Cars must be built in accordance with Lemons car, Chumpcar or American Endurance Racing Rules with the following exceptions:

24.3 External “props” such as shark fins, mannequin legs, butterfly wings, cow horns are not allowed. The tech inspectors will make the final decision with regards to “props” and body modification

24.4 At the discretion of the tech inspector’s prior body damage that represents no danger to the driver or the other competitors may be allowed

24.5 No Death Race, Animal House, Military or “armed” vehicles or vessels are allowed. No waivers, no exceptions!

24.6 Specifications Cont.
IT-J eligible cars must be:

24.7 Mass produced four (4) wheeled passenger cars that are gasoline powered with production based engines.

24.8 A minimum weight of 1800 pounds and a maximum of 4000 pounds as raced (as leaving the track). Cars weighing over 4000 pounds and under 4300 pounds may appeal to tech for an event waiver of weight.

24.9 Tires must conform to Midwestern Council Improved Touring rules and must be consistent with the dimensions in the GCR.

24.10 Preparation of the brakes, suspension and engine must meet either Chumpcar or Midwestern Council Improved Touring Rules.

24.11 Specifications Cont.

24.12 This class is to allow cars built for competition in other organizations and is not intended to be developed as a Midwestern Council class. Rule development and changes will therefore come from Lemons, Chumpcar and American Endurance Racing and will not be generated by Midwestern Council..

24.13 Specifications Cont.

24.14 Cars in this class are NOT allowed to enter in the vintage run group regardless of year of manufacture of the original vehicle.

Production Categories

Production Category

1. GCR

These specifications are part of the MCSCC General Competition Rules (GCR) and all automobiles shall conform to GCR ***Automobiles – General Regulations.***

1. Purpose

The Production Category is intended to provide the membership with the opportunity to compete in modified, series produced automobiles. To that end, cars will be classified in Production classes based on their competitive potential in modified form. The Club may alter or adjust specifications and permit or restrict certain components to equate competitive potential.

2. Intent

It is the intent of these rules to allow modifications useful and necessary in the preparation of a high-performance road racing vehicle. The Club will use the following guidelines in the determination of suitability for classification in the Production Category.

2.1 Cars classified shall retain their original design, structure, and drive layout unless otherwise specified in these rules.

2.2 Classification will be based on the specifications of the base model of the automobile as it was delivered for sale in the United States. Unless specifically authorized, no options of any type or nature are permitted.

2.3 Automobiles submitted for new classification in the Production Category shall be series-produced. Such cars shall be equipped with normal road car equipment and be approved by the E.P.A. and DOT for sale in the United States. The Club may not classify vehicles meeting all these requirements if it deems them unsuitable for inclusion in the Production Category.

3. Specifications

3.1 The MCSCC will utilize the appropriate current SCCA® spec sheets for each car listed in the same class by both sanctioning bodies. Any listed cars without spec sheets will need the competitor to supply factory manuals to justify specs in the event of having a protest filed against him.

3.2 Cars may be updated or backdated within the specifications of recognized makes and models listed on the same line of the PCS. This specification line will state the weight for each configuration of the model. Cars shall meet or exceed this official weight as qualified or raced including the driver.

3.3 The Club may recognize certain optional components. Some non-original components may be mandatory to obtain an adjustment of competition potential. In all cases, these components shall be listed on the specification page of the vehicle. No permitted or alternate component or modification shall additionally perform a prohibited function.

3.4 Requests for alteration, modification, and/or substitution of any specification or component shall be submitted to the Club for approval. The approval process will include, but not be limited to, an analyst of cost, availability, performance impact, rule enforceability, and competitor input.

4. Authorized Modifications

The following modifications are authorized on all Production Category cars. Modifications shall not be made unless specifically authorized herein.

4.1 Engine

4.1.1 Component Modification

4.1.1.1 Original and alternate components of the engine may be lightened, balanced, and modified by any mechanical or chemical means, provided that it is always possible to identify required components as original. Such means include, but are not limited to, shot peening, glass beading, heat treatment or hardening, plating, and milling or otherwise tooling.

4.1.1.2 No material or mechanical extension may be added to any required original component unless specifically authorized by these rules. Any repair performed to a required original component shall clearly serve no other prohibited function.

4.1.2 Induction System

4.1.2.1 The standard or approved optional carburetor(s) may be modified. The number, model, type, throttle plate and shaft location, and bore diameter (as measured at the throttle plate) shall remain as specified. All inducted air shall pass through the venturi(s) of said carburetor(s). All carburetors with restricted venturi(s) must retain such venturi(s) in the original location within the carburetor. Cars without and SCCA® spec sheet may use any carb which mounts to the original mounting bolt pattern size using the original mounting hardware and intake manifold without modifying either. Any car which cannot mount a Weber 32/36 mounting bolt pattern size carb will be allowed to use an adapter no greater than 3/8" thick to adapt the manifold to the Weber mounting size. Cars with an SCCA® spec sheet may follow either the spec sheet or use the above statement, however, you cannot exceed carburetor size listed on spec sheet if doing so. A car with a transverse mounted engine may use an adapter no greater than 1 ¼" in order to rotate the carb from its original mounting orientation.

4.1.2.2 Fuel injection is prohibited on Production Category cars unless specifically authorized on vehicle specification line. Approved cars utilizing fuel injection shall use the factory manifold and throttle body. Throttle body bore size shall remain stock. Manifold and throttle body may be ported and polished. The manifold may be cut apart to facilitate this work. When such disassembly is rewelded, the external dimensions of the manifold shall remain unchanged. The number of injections shall remain the same as stock and their relative mounting

position and injection point shall be unchanged. The fuel injection system is unrestricted except that the original type (electrical, mechanical, etc.) shall be maintained. External throttle linkage to the standard fuel injection may be modified or changed.

4.1.2.3 Extensions to, or the addition of material to the exterior of the carburetor body is prohibited. Floats shall not be removed or altered to produce a float less type carburetor.

4.1.2.4 All carburetors shall retain their standard method of fuel distribution. Utilization or modification of components that effect an annular discharge configuration is prohibited.

4.1.2.5 Air cleaners, velocity stacks, and air supply ducts and boxes are unrestricted provided no modification of the body or chassis of the car is required to accommodate their use.

4.1.2.6 Original or approved alternate intake manifold(s) may be ported and polished. It/they may be cut apart to facilitate this work. When such disassembly is rewelded, the external dimensions of the manifold shall remain unchanged.

4.1.2.7 Where a single down-draft carburetor is listed as an alternate on a vehicle's specification page, an adapter may be used to fit the alternate carburetor to the original intake manifold. The adapter may be restricted to dimensions given on the vehicle's specification page.

4.1.2.8 No portion of any intake manifold may extend into the intake ports of the cylinder head or rotary-engine end plate. All alternate intake manifolds shall be capable of attachment without modification of the cylinder head or end plate. Port-to-port balance pipes or tubes in all intake manifolds may be plugged or restricted.

4.1.2.9 Any linkage may be used between the throttle and the accelerator pedal. Two spring-loaded systems of positive throttle closure are strongly recommended.

4.1.3 Fuel System

4.1.3.1 Any fuel pumps, lines, filters, and pressure regulators may be used, provided no component serves any fuel cooling purpose.

4.1.3.2 Fuel lines that pass through the driver/passenger compartment shall be metal braided or entirely covered and protected with a metal cover. If a mechanical pump is replaced, a blanking plate may be used to cover the original mounting point.

4.1.4 Emission Equipment

4.1.4.1 Exhaust emission control air pumps, associated lines, nozzles and other mechanical electrical emission devices shall be removed. When EGR air nozzles are removed from a cylinder head, the resultant holes shall be completely plugged.

4.1.5 Cylinder Head

4.1.5.1 The original or a specified alternate cylinder head shall be used. Porting, polishing, and machining within the limits of Production Car Rule ***5.1.1.1*** are unrestricted. Any valve guides and valve seats may be used. (See vehicle sheets for specific restriction.) On engines which are restricted to Improved Touring cylinder head preparation, the cylinder head and/or valve train may be machined for clearance to install and alternate camshaft.

4.1.5.2 Compression ratio may be increased by means of milling the head, and it may be machined to utilize O-rings to replace or supplement a cylinder head gasket.

4.1.6 Camshaft and Valve Gear

4.1.6.1 Any camshaft(s) and lifters/cam followers may be used. Lifters/cam followers shall be of the same type and diameter as original.

4.1.6.2 Cam timing chains, gears, belts, and sprockets are unrestricted provided that they are of the same type, quantity, and dimensions as originally fitted. Double-row chains may be substituted for single row.

4.1.6.3 A timing chain/belt tensioner may be added to those engines not originally so equipped, provided that it acts upon that portion of the chain/belt that travels from the crank drive to the first cam sprocket/gear. The timing chain cover may be modified to facilitate its use. Adjustable cam timing sprockets are permitted.

4.1.6.4 Any metal valves meeting the specified head diameter may be used. Any valve springs of the same type as originally fitted may be used. Valve retainers, keepers, seals and adjustable shims are unrestricted.

4.1.6.5 Pushrods, valve rocker arms, shafts and attendant assemblies are unrestricted.

4.1.7 Block

4.1.7.1 The block may be rebored no more than 1.2mm (.0472 in) larger than the maximum dimension given on the specification page for that make, model, and displacement. A cylinder block from any model from the same manufacturer which is of the same material and dimensionally identical throughout, except for non-critical bosses, is permitted.

4.1.7.2 Cylinder sleeves may be fitted to the block for repair purposes if they serve no other prohibited function. Oil passages may be enlarged, restricted, or plugged.

4.1.7.3 Any crankshaft main bearing caps and any additional main bearing cap bolts may be used, provided that no material is added to the block for their use.

4.1.7.4 The compression ratio may be increased by means of milling the block, and it may be machined to utilize O-rings to replace or supplement a cylinder head gasket.

4.1.7.5 The block may be machined for the purpose of adding or substituting crankshaft oil seal(s) and related attachment devices.

4.1.8 Pistons and Rods

4.1.8.1 Pistons, pins, clips and/or pin retainers and piston O-rings are unrestricted. Pistons shall be constructed of metal.

4.1.8.2 Alternate ferrous connecting rods of the same center-to-center dimensions are original are permitted.

4.1.9 Crank and Flywheel

4.1.9.1 Alternate crankshafts are permitted. Such a component shall be listed on the vehicle's specification page, shall be constructed of ferrous material, and shall have the same stroke and bearing journal diameters as the original crankshaft. It shall retain the original angles of the crank throws and the original firing order.

4.1.9.2 In all cars, the original direction of crankshaft rotation shall be maintained.

4.1.9.3 The use of any external crankshaft vibration dampener is permitted.

4.1.9.4 Any flywheel of the same diameter as the original may be used, provided it attaches to the standard or alternate crankshaft at the original location. Additional fasteners and dowel pins may be added. The diameter of the flywheel includes the diameter of the ring gear. Cars which are allowed specific alternate transmission may use the stock size flywheel for that alternate transmission.

4.1.9.5 Any modification or substitution of the clutch assembly and its dimensions is permitted. Carbon clutches are prohibited.

4.1.10 Oiling System

4.1.10.1 Any mechanically-driven oil pumps may be used, including a dry sump system. The dry tank shall be mounted within the body work. If said tank is mounted in the driver/passenger compartment, it shall be isolated from the driver by means of a metal bulkhead or additional container that retains any spillage or leakage.

4.1.10.2 The use of any oil pan/sump, scrapers, baffles, windage trays, oil pickup(s), pressure accumulator/"Accusump" and oil filter(s) is permitted. Filter and accumulator location is unrestricted, but they shall be securely mounted within the bodywork.

4.1.10.3 Oil filters mounted in the driver/passenger compartment shall comply with the isolation specifications of Production Car Rule ***5.1.10.1***, above. Any oil lines may be used. If such lines run through the driver/passenger compartment, they shall meet the safety specifications for fuel lines in Production Car Rule ***5.1.3***, above.

4.1.10.4 The installation of any type of vent or breather on the engine is permitted. Crankcase, oiling system, breather, or catch tank evacuation systems that are in any way connected to the exhaust system are prohibited.

4.1.11 Starter/Ignition/Electrical System

4.1.11.1 The use of any driver-operated electric starter is permitted, provided it is installed in the same general location as the original starter.

4.1.11.2 Any ignition system and ignition components may be used provided no functional modification of the engine is required for their use. Magneto systems are prohibited. If a distributor is removed, a blanking plate or breather may be fitted in its place. Adjustments from the passenger compartment during competition are prohibited. (The intent of this change is not to eliminate dual ignition systems, nor to restrict driver selection between multiple ignition systems, i.e. crank-triggered and points, of cars so equipped).

4.1.11.3 The original generator or alternator may be completely removed or replaced by any unit fitted to the same location and utilizing the same drive system as the original.

4.1.11.4 Any make, size, or voltage of battery is permitted. Battery location is unrestricted within the bodywork. If moved from the manufactures original location, it must be in a nonconductive marine type container or equivalent. The hot terminal must be insulated on all cars. All batteries (onboard power supplies) shall be attached securely to the frame or chassis in such a way as to insure that the battery will remain in place.

4.1.11.5 The wiring harness may be altered or replaced. Electrical accessories (horn, signal lights, etc.) may be altered, replaced, or removed.

4.1.12 Exhaust System

4.1.12.1 Any exhaust manifold and exhaust system may be used. All exhaust systems shall meet the specifications of GCR ***Automobiles – General Regulations*** section ***9.3.7***., "Exhaust Systems". Refer to Section ***5.9.1.16***, of these rules for permitted body modifications for exhaust systems.

4.1.12.2 Other Engine Components

4.1.12.3 The use of alternate engine components which are normally expendable and considered replacement parts, such as seals, bearings, water pumps, etc., is permitted. Electrically-driven water pumps are prohibited. Fasteners may be substituted.

4.1.12.4 Bushings may be installed where none are fitted as standard, provided they are concentric, and that the centerline of the bushed part is not changed. The addition of alignment dowels is permitted.

4.1.12.5 Gaskets may be replaced with others of unrestricted origin.

4.1.12.6 Alternator/generator, crankshaft, and water pump pulleys may be altered or replaced by others of unrestricted origin.

4.1.12.7 One or more engine torque suppressors (steady rods) may be fitted. Original torque suppressors may be altered or replaced.

4.1.12.8 Motor mounts of alternate design and/or material may be used, but there shall be no change to the engine's fore-and-aft or vertical location. Transverse-engine vehicles may rotate the engine about the crankshaft centerline to align axles/CV joints. On rear engine/rear drive cars the engine/drive train may be relocated vertically upward, to a maximum of 1" (one inch), to allow alignment of suspension and driveline components. No other engine rotation or relocation is permitted on any car.

4.2 Engine, Rotary Piston (only)

4.2.1 Modifications

4.2.1.1 Engines shall not change the capacity of the working chambers.

4.2.1.2 The eccentric shaft may be replaced with another of the same basic material, but no changes in the eccentricity of journal dimensions are permitted.

4.2.1.3 Rotors are unrestricted, providing the number of lobes remains unchanged.

4.2.1.4 Alternate rotor housings are allowed only when submitted by the manufacturer and approved by the Club.

4.3 Cooling System

4.3.1 Radiator

4.3.1.1 Any water radiator may be used, provided that its installation is in the same approximate location as the original, and that there are no modifications to the body, chassis, or internal structure of the car to accommodate its use other than those specified by these rules or permitted by the vehicle's specification page in the PCS. A separate cooling system expansion tank mounted within the engine compartment may be fitted.

4.3.2 Radiator Fan

4.3.2.1 The radiator fan may be modified, substituted, or removed. Electrically operated fan(s) may be installed; its/their location shall be within four (4) inches of the radiator.

4.3.3 Radiator Shroud

4.3.3.1 The original radiator shroud may be altered or replaced. A shroud may be added if not originally provided by the manufacturer.

4.3.3.2 Sealing the air flow area between the radiator, its shroud, any fan(s), and the normal grill opening is permitted. No alternate radiator shroud shall be extended behind the radiator further than the rear edge of the rearmost mounted fan. If no cooling fan is fitted, the alternate shroud shall end at the radiator.

4.3.3.3 Note: Exceptions to this rule may be permitted in those cases (e.g., rear engine/front radiator, rear engine/rear radiator) where specific need can be demonstrated for alternate specifications. Such exceptions shall be listed on the specification page of the vehicle.

4.3.3.4 No new openings in the bodywork or structure of the car shall be created to allow the radiator shroud access to ducted airflow. Any exception to this rule must appear on a vehicle's specification page.

4.3.3.5 Air cooled engine shrouding: An alternate fan and/or fan shroud is/are permitted on air cooled engines.

4.3.4 Thermostat

4.3.4.1 Thermostats may be modified, removed, or replaced with blanking sleeves or restrictors.

4.3.5 Oil/Lubricant Coolers

4.3.5.1 Any engine, transmission, and/or differential oil cooler(s) may be used, provided the location of such cooler(s) is completely within or under the bodywork, but not within the driver/passenger compartment.

4.3.5.2 Oil pump(s) may be added for the transmission and/or differential oil coolers.

4.3.5.3 Air ducts may be fitted to the oil/lubricant cooler(s). Front-mounted ducting shall not extend forward of the most forward part of the front body panel. Rear mounted/terminated ducting shall comply with the restrictions on shrouds found in Production Car Rule ***5.3.3.2***, above.

4.4 Transmission and Final Drive

4.4.1 Transmission

4.4.1.1 Any available transmission may be used, providing the location and number of forward speeds are the same as the original. The original number of forward speeds does not include any external or internal overdrive mechanism (a 4-speed plus O.D. is only 4 speeds). Specific exemptions to this rule shall be listed on the vehicle's specification page. Sequential shifting transmissions are prohibited. Vehicle PCVS sheets list additional weight penalties for specific models. Air, hydraulic, or electric actuation of the gearshift mechanism is not allowed.

4.4.1.2 All transmissions shall have a functional reverse speed/gears. A device for locking out reverse gear may be added. Shift linkage may be modified or substituted.

4.4.1.3 The shift lever opening in the body of the car may be altered to allow the installation of alternate shift linkage.

4.4.1.4 The transmission tunnel/cover may be altered to allow the installation of an alternate transmission and/or driveshaft. Cars originally equipped with a removable transmission tunnel/cover may substitute a tunnel/cover of an alternate material.

4.4.2 Final Drive

4.4.2.1 Alternate driveshaft(s) may be used. Any driveshaft assembly may be modified to permit the use of an alternate transmission.

4.4.2.2 The use of any final drive ratio and/or limited-slip or locked differential is permitted.

4.4.2.3 The substitution of the differential housing is permitted on front-engine, rear-drive vehicles. Such substitution is permitted on front-engine, front-drive and rear-engine, rear drive vehicles only through the use of an alternate transmission, which contains an integrated differential assembly/housing.

4.4.2.4 Drive axle shafts, bearings, bearing carriers, hubs, and universal/CV joints may be modified or substituted, provided the numbers of these parts remain the same as the original.

4.4.2.5 Solid Rear Axle Cars: multiple rear axle bearings may be fitted on a solid rear axle car. These changes shall not result in any change to the rear track specification of the car.

4.5 Unrestricted Suspensions

4.5.1 Ride Height

4.5.1.1 Any ride height consistent with safe operation of the vehicle is permitted.

4.5.2 Suspension Components

4.5.2.1 Spindles, hubs, bearings, bearing carriers, stub axles, etc., may be modified or substituted, provided that the number of these parts remains the same as the original design.

4.5.3 Springs and Shock Absorbers

4.5.3.1 Any springs or torsion bars may be used in the vehicle's original suspension configuration, provided the quantity of these items does not exceed the number originally provided by the manufacturer. Spring seats and points of attachment may be altered to accept alternate springs.

4.5.3.2 Alternately, all cars may fit "coil-over" type springs with tubular, load-bearing shock absorbers or struts. The shock absorber or McPherson/Chapman strut shall be installed inside the spring. Such items shall not exceed one spring and shock/strut per wheel. When load-bearing shocks are used, the original springs may be removed.

4.5.3.3 Any shock absorbers may be used, not to exceed one unit per wheel.

4.5.3.4 Attachment points for the shock absorber may be changed. Rear attachment points may enter the driver/passenger compartment/trunk, but shall be covered with metal panels.

4.5.3.5 Lever shock absorbers may be modified or entirely eliminated. When lever shocks are replaced with tubular shocks, the entire shock assembly may be removed and replaced with a control link and bracket that approximates the control function of the original lever shock.

4.5.3.6 Bump stop rubbers and bracketry may be removed or replaced with others or unrestricted design.

4.5.3.7 Rockers, rocker arms, push and/or pull rods are prohibited.

4.5.4 Suspension Control

4.5.4.1 Original suspension control arms may be reinforced, modified, or replaced with components of unrestricted origin.

4.5.4.2 Suspension pickup points on the chassis or structure may be relocated and/or reinforced. If such points are relocated to the driver/passenger/trunk compartments, such points and attendant suspension components shall be covered with metal panels.

4.5.4.3 The manufacturer's original system of suspension, e.g., live axle, swing axle, MacPherson strut, a-arm, etc., shall be retained. The wheelbase of the vehicle shall not be changed or relocated in a fore/aft direction.

4.5.4.4 Suspension bushings are unrestricted. Adjustable spherical bearings or rod-ends are permitted on all suspension components.

4.5.4.5 Any anti-roll bar, camber compensating device, panhard rod, watts linkage and/or other suspension stabilizer is permitted. Attachment points of such components are unrestricted.

4.5.4.5.1 Said components may extend into the driver/passenger/trunk compartments, but shall be covered with metal panels.

4.5.4.5.2 These components may pass through body panels, chassis panels and frame members.

4.5.4.6 Spacers/lowering blocks may be used between leaf springs and the points of attachment to the axle housing.

4.6 Restricted Suspensions

4.6.1 Ride Height

4.6.1.1 Any ride heights consistent with safe operation of the vehicle is permitted.

4.6.2 Springs and Shock Absorbers

4.6.2.1 Any shock absorbers may be used, provided they attach to the original mounting points. The number and type (e.g. tube, lever, etc.) of shock absorbers shall be the same as stock. The interchange of gas and hydraulic shock absorbers is permitted. Remote reservoir shock absorbers are permitted. The location of the reservoir is unrestricted. No shock absorber may be capable of adjustment while the car is in motion, unless fitted with original equipment.

4.6.2.2 MacPherson strut equipped cars may substitute struts, and/or may use any insert. Spring ride seat height location may be altered from stock.

4.6.2.3 Springs of any original may be used, provided they are of the same number and type as originally fitted, i.e., coil, leaf, torsion bar, and that they shall be installed in the original location using the original system of attachment. Shackles or spacers may be used to adjust leaf spring ride height. Spacers, including threaded units with adjustable spring seats, may be used with coil springs.

4.6.2.4 Coil-over struts or shocks absorbers, where a threaded sleeve is permanently attached to a housing, are prohibited unless fitted as standard equipment.

4.6.3 Suspension Control

4.6.3.1 Control arms may be reinforced or alternate control arms may be used. Original suspension control arms may be reinforced, modified, or replaced with components of unrestricted origin.

4.6.3.2 Any anti-roll bar(s), traction bar(s), panhard rod or watts linkage may be added or substituted, provided its/their installation serves no other purpose. The mounts for these devices may be welded or bolted to the structure of the vehicle. No suspension control mount or component shall be located in the trunk or structure of the vehicle. No suspension control mount or component shall be located in the trunk or driver/passenger compartment unless installed by the manufacturer as original equipment. Traction bars used to control axle rotation shall be on piece solid bar or tube. Heim rod ends may be fitted. Suspension pickup points on the chassis or structure may be relocated and/or reinforced. If such points are relocated to the driver/passenger/trunk compartments, such points and attendant suspension components shall be covered with metal panels.

4.6.3.3 On those cars where an anti-roll bar also acts as a suspension locating device, the diameter of the bar may be changed. Bar attachment and pivot points on the chassis and control arms shall remain as stock, except as provided for in these Rules. The manufacturers original system of suspension, e.g., live axle, swing axle, MacPherson strut, a-arm, etc., shall be retained. The wheelbase of the vehicle shall not be changed or relocated in a fore/aft director.

4.6.3.4 Suspension bushings are unrestricted. Adjustable spherical bearings or rod-ends are permitted on all suspension components.

4.6.3.5 Any anti-roll bar, camber compensating device, panhard rod, watts linkage and/or other suspension stabilizer is permitted. Attachment points of such components are unrestricted.

4.6.3.5.1 Said components may extend into the driver/passenger/trunk compartments, but shall be covered with metal panels.

4.6.3.5.2 These components may pass through body panels, chassis panels and frame members.

4.6.3.6 Spacers/lowering blocks may be used between leaf springs and the points of attachment to the axle housing.

4.6.4 Suspension Mounting Points

4.6.4.1 Cars equipped with MacPherson strut suspension may decamber wheels by the use of eccentric bushings at control arm pivot points, by the use of eccentric bushings at the strut-to-bearing-carrier joint, and/or by use of slotted adjusting plates at the top mounting point. If slotted plates are used, they shall be located on existing chassis structure and may not serve as reinforcement for that structure. Material may be removed or added to the top of the strut tower to facilitate installation of adjustor plate, provided it serves no other purpose.

4.6.4.2 On other forms of suspension, camber adjustment may be achieved by the use of shims and/or eccentric bushings.

4.6.4.3 All forms of suspension may adjust caster by means of shims or eccentric bushings. Additionally, MacPherson strut-equipped cars may adjust caster at the upper strut mounting point/plate.

4.6.4.4 Independent rear suspension mounting holes may be slotted and reinforced for purposes of camber and/or toe adjustment providing stock control arms are utilized. Material may be removed or added to the top of the strut tower to facilitate installation of adjuster plate provided it serves no other purpose.

4.6.4.5 Bushing material, including that used to mount a suspension subframe to the chassis, is unrestricted.

4.6.4.6 Rubber bump stops may be removed, but their chassis mounts, brackets, etc., may not be altered in any way.

4.6.4.7 Pick-up points may be reinforced but not relocated.

4.6.4.8 Hardware items (nuts, bolts, etc.) may be replaced by similar items performing the same fastening function(s).

4.6.5 Steering

4.6.5.1 Steering arms, pitman arms, and steering linkage component parts may be reinforced. The steering system shall not be changed.

4.6.5.2 The steering column shall not be modified in any way other than to improve its impact energy-absorbing characteristics. A collapsible-type steering column is strongly recommended.

4.6.5.3 Any steering wheel and wheel quick-release mechanism complying with ***Automobiles – General Regulations*** I, Section ***9.3.24***, may be used.

4.7 Brakes

4.7.1 Brake Components

4.7.1.1 Original brake calipers shall be retained. Alternated discs or drums may be fitted as long as they are of the original diameter and width, and the same material and design as the originals. Only those alternate components authorized on a vehicles specification page may be fitted as replacements. Disc brake rotors and brake drums shall not be modified other than for truing and installation.

4.7.1.2 Dual braking systems are required. Any dual brake master cylinder(s) may be fitted. Any pressure equalizing or proportioning devices are permitted.

4.7.1.3 A servo assist may be added, or standard servo assist may be modified, removed, or replaced.

4.7.1.4 Drum brake wheel cylinder size may be changed.

4.7.1.5 Any brake pads and/or linings that fit the original or approved alternate brake components may be used. Any brake lines may be fitted.

4.7.1.6 The hand brake and its operating mechanism may be removed.

4.7.1.7 Cars with rear drum brakes may convert to disc brakes. Rear rotors shall be no larger in diameter that the front rotors, solid and of ferrous material. Rotor hubs may be ferrous material or aluminum and may be part if the rotor. Read calipers and mounting brackets are restricted to ferrous or aluminum.

4.7.2 Brake Ducting

4.7.2.1 Brakes may be cooled by the ventilation of backing plates or the fitting of air ducts, provided no changes are made in the bodywork for this purpose.

4.7.2.2 Front mounted ducting shall not extend to the side beyond the centerlines of the front wheels, nor forward of the most forward part of the front body panel or spoiler/air-dam.

4.7.2.3 Rear brake ducts shall extend, in a forward direction only, no more than twenty-four (24) inches from the rear brake disc/drums.

4.7.2.4 Disc brake dust/splash shields may be altered or removed.

4.8 Wheels and Tires

4.8.1 Wheels

4.8.1.1 Any wheel and tire combination may be used within the following limitations.

4.8.2 Tires

4.8.2.1 Cars shall utilize tires meeting or exceeding the requirements of GCR ***Automobiles – General Regulations*** section ***9.3.4,*** (Tires).

4.8.2.2 Make and size of tires are unrestricted, provided that the tires do not interfere with the body work, frame, or suspension under any conditions of steering lock or rebound.

4.8.2.3 Tire tread (that portion of the tire that contacts the ground) shall not protrude beyond the fender opening when viewed from the top perpendicular to the ground.

4.8.2.4 Spare tires and wheels shall be removed.

4.8.2.5 Radial tires are permitted only if they are D.O.T approved and meet ***Automobile – General Regulations*** Section ***9.3.4***.

4.9 Body Structure

4.9.1 Configuration/Modifications

4.9.1.1 **Lightening**: Component parts of the car's body/structure, e/g/, hood, doors, and deck lid, may be lightened, provided that structural rigidity is appropriate and that the original appearance is maintained save for those alterations permitted by these rules. No non-original openings shall be created. Chemical removal of metal ("acid dipping") is prohibited.

4.9.1.2 **Alternate Materials**: The hood and deck lid may be replaced by components of an alternate material, provided their appearance remains as original. Doors with remain using original material.

4.9.1.2.1 Fenders may be replaced by components of alternate materials. Additionally, the exterior contour of the fender may be altered (flared) provided that the wheel opening profile (its size, location, and shape when viewed from the side) is not changed. Alternate fenders and flares shall not materially alter the basic configuration of the body.

4.9.1.2.2 One piece front body sections are permitted only on vehicles originally manufactured in that configuration, i.e., Mk I Sprite, Spitfire. Additionally, all such sections shall retain inner fender panels original present. These panels may also be constructed of an alternate material.

4.9.1.3 **Wheel Wells:** Interior fender panels may be altered, using the original type of material, in order to provide clearance for tires and wheels. Such alteration shall not result in the creation of any additional openings between the wheel well and the engine, passenger, and luggage/trunk compartments.

4.9.1.4 **Component Alignment**: The hood and lid hinges may be removed and the respective components secured by means of additional pins or straps. Misalignment or modifications to create ventilation where none previously existed are prohibited. Door hinges shall be retained, but doors may be pinned (not bolted) for retention. Door handles may be removed and any resultant holes shall be covered.

4.9.1.5 **Bumpers**: When, by design and function, bumpers are integrated into the body configuration of a vehicle, they may be replaced by replicas of an alternate material, but shall not be removed. Bumpers which are remote from and not an integral part of the body may be removed or replaced by replicas of an alternate material. If a bumper is removed, all hardware originally fitted for its mounting which projects outside the body shell shall also be removed.

4.9.1.6 **Grille**: The grille (or its equivalent front design element) shall not be removed and shall be installed in its original location and configuration.

4.9.1.7 **Windshield – Open Cars**: The windshield and all side and rear glass on open cars shall be completely removed, including all mounting brackets and fixtures, and a suitable windscreen installed. Portions of the windscreen, which are not in the driver's line of sight, may be constructed of a polycarbonate or composite material. Any portion of the windscreen that is in the driver's line of sight shall be constructed of a clear transparent material. The windscreen shall not exceed the height or width of the original windshield/screen. The replacement windscreen shall be fitted within the vertical planes of the front most and rearmost elements of the original windshield/screen.

4.9.1.8 **Windshield/Rear Windows – Closed Cars**: Closed cars may retain their original windshields, and shall fit windshield retention clips per GT rules. Windshields of alternate material (i.e. Lexan MR-5/MR-7/MR-10 or FMR 102) are permitted Alternate windshields must be of 6mm minimum thickness. Alternate material windshields must be identical in size and curvature to the original glass component. Alternate material windshields shall have in addition, three (3) inner supports to prevent the windshield from collapsing inward. These supports shall be 0.75' by .125" minimum straps of aluminum. Spacing between these inner supports shall be eight (8) inches minimum. Close cars may replace the rear window and side windows with clear, untinted polycarbonate material having a minimum thickness of 0.125". The rear window shall be retained by means of straps per GT rules.

4.9.1.9 **Door Glass (All Cars)**: All door window glass, channels, vent windows, and window winding mechanisms may be removed. Resultant window slots may be covered. Four (4) door cars may install untinted polycarbonate material having a minimum thickness of .125" in place of the removed glass in the rear doors.

4.9.1.10 **Targa-type Vehicles**: May be prepared to either closed-car or open-car windshield/window specifications. Refer to Automobiles – General Regulations section 9.3.21.

4.9.1.11 **Spoilers**: A spoiler may be fitted to the front of the car. It shall not protrude beyond the overall outline of the car as viewed from above, or aft of the forward most part of the front fender opening (cutout), and shall not be mounted more than four (4) inches above the horizontal centerline of the front wheel hubs. The spoiler shall not cover normal grill opening at the front of the car. (An intermediate mounting device may be used on cars whose front bodywork is above the four (4) inch maximum.) Openings are permitted for the purpose of ducting air to the brakes, radiator, and/or oil coolers. When bumpers are used or when they are part of the bodywork, the spoiler and bumper/replica bumper shall appear to be two (2) separate parts. The spoiler shall have no support or reinforcements extending aft of the forward most part of the front fender wheel opening.

4.9.1.12 **Lights and Lenses**: Glass and/or plastic headlight, front parking and signal light lenses and bulbs may be removed. Other lighting components and operating ancillaries may be removed, but the headlight rims/bezels

shall remain in their original locations. The resultant openings behind the rims/bezels shall be covered with wire mesh screens or solid panels of an alternate material. These covers shall be of the same or flatter contour as the original lenses.

4.9.1.13 The top may be removed from open cars or must be folded and securely fastened.

4.9.1.14 Windshield wiper motors, arms, and mechanisms may be substituted or completely removed. Holes created in the body by the removal of these components may be covered.

4.9.1.15 Heater plenums that do not serve as a major part of the structure of the firewall may be removed or modified. Any other firewall modifications are prohibited unless specifically approved and listed on the specification page for the vehicle.

4.9.1.16 Floor plans shall be altered only to recess mufflers. All other parts of the exhaust system (i.e., headers, tailpipes, etc.) shall not be recessed, not shall any modifications be made to the bodywork for that purpose.

4.9.1.17 Non-metallic floor boards may be replaced with metal floor boards of a minimum .060" thickness.

4.9.2 Integrity of Structure

4.9.2.1 All permitted alterations, modifications, components, or safety structure installations are understood to be additions to the basic vehicle. No part of the body, frame, or unibody shall be altered or substituted unless specifically authorized by these rules or by the vehicle's specification page.

4.10 Driver/Passenger Compartment – Trunk

4.10.1 Seating

4.10.1.1 The driver's seat may be replaced with any seat suitable for racing. Such seat shall be installed so that a second seat of the same dimensions could be simultaneously fitted to the passenger's side of the car (no center seating.) all seat mountings shall be reinforced per ***Automobiles – General Regulations*** Section ***9.3.13***, Seats. All other seats and all original headrests may be removed.

4.10.2 Gauges and Accessories

4.10.2.1 The instrument panel may be altered or replaced to permit the installation of gauges, switches, indicators, safety equipment, and/or roll cage structure. Any mirrors may be used and shall comply with ***Automobiles – General Regulations*** Section ***9.3.17***, Mirrors.

4.10.3 Interior Modifications

4.10.3.1 Modifications may be made to the driver/passenger compartment to improve the comfort of and control accessibility to the driver, and to permit the installation of required safety equipment. Covers for all equipment located in the driver/passenger compartment forward of the rearmost portion of the door opening shall not extend higher than six (6) inches below the highest point of the door. Exceptions to this rule shall be noted on the vehicle specification line. Alternatively, the dry sump tank cover may be located within 18" of the front of rear cowl and no higher than the cowl.

4.10.3.2 All interior trim, floor covering, and upholstery panels may be removed. If so removed, original interior door panels shall be substituted with panels of non-flammable material.

4.10.3.3 A metal bulkhead shall be installed between the driver/passenger compartment and the compartment of area where the fuel cell or fuel tank is located. All bulkheads shall meet the requirements of ***Automobiles – General Regulations*** Section ***9.3.16***, Fire Wall and Floor.

4.11 Safety

4.11.1 Roll Cage

4.11.1.1 All automobiles shall have a safety roll bar meeting or exceeding the specifications of ***Automobiles – General Regulations*** Section ***9.3.14***, Roll Bars/Cage. A roll cage is highly recommended.

4.11.2 Fuel Cells

4.11.2.1 Fuel cells are highly recommended on all Production cars. Cells, their mounting, location, fill equipment, and venting, shall meet the specifications of ***Automobiles – General Regulations*** Section ***9.3.10***, ***9.3.22***, and ***Appendix X***.

4.11.2.2 Those Production Category vehicles currently equipped with original gas tanks may use any gas cap meeting ***Automobiles – General Regulations*** Section ***9.3.10***. One-way, anti-surge caps are recommended.

4.11.3 Master Switch

4.11.3.1 All cars shall be equipped with an electrical system master cutoff switch meeting the requirements of GCR ***Automobiles – General Regulations*** Section ***9.3.23***.

4.11.4 Safety Harness

4.11.4.1 Systems shall meet the specifications of ***Automobiles – General Regulations*** Section ***9.3.12***. Window nets meeting the requirements of ***Safety Equipment*** Section 9 are required on all closed cars.

4.11.5 Fire Systems/Extinguishers

4.11.5.1 All cars shall conform to the specifications of ***Automobiles – General Regulations***.

4.11.5.2 On-board fire systems are highly recommended on all Production Category cars.

5. Car Classification

5.1 Production Category automobiles shall be divided into classes based on relative performance as follows:

6. E Production Specifications

Year	Manufacturer	Model	Disp.	Weight (lbs)	PCS	Limited Prep
86-89	Acura	Integra	1590cc	2000		Y
	Alfa Romeo	Spider Duetto/1750	1570-1799cc	1920		Y
75-79	Alfa Romeo	Alfetta GT	1961cc	2100	Y	
	BMW	Z3	1895cc	2100		Y
82-87	Chevrolet	Cavalier 2.0	1990cc	2190	Y	
83-84	Dodge	Omni 024/Shelby Charger	2213cc	2080	Y	
	Dodge	Omni GLH	2213cc	2190	Y	
	Elva	Courier MK I, II, III	1622cc	1570	Y	
	Elva	Courier MK I, II, III	1798cc	1670	Y	
	Elva	Courier MK III, IV, R & C	1622cc	1570	Y	
	Elva	Courier MK III, IV, R & C	1798cc	1670	Y	
	Fiat 124	Spider 1600, 2000	1995cc	2120	Y	
85-87	Ford	Escort	1859cc	1920	Y	
	Honda	Civic Del Sol	1590cc	2150		Y
88-91	Honda	CRX Si	1590cc	2000	Y	
	Honda	Prelude Si	2259cc	2480		Y
	Lotus	Europe Mark 46, 54, 65	1470-1565cc	1373	Y	
	Lotus	Super 7	1498cc	1300	N	
	Lotus	Super 7 Series Four	1599cc	1650	Y	
	Mazda	RX-2	2292cc	2100		Y
-93	Mazda	Miata MX5	1839cc	2120	Y	
1999	Mazda	Miata MX5 M2	1840cc	2000		Y
72-78	Mazda	RX-3, 3SP	2292cc	2100		Y
79-85	Mazda	RX-7	2292cc	2050		Y
79-85	Mazda	RX-7	2616cc	2190		Y
86-91	Mazda	RX-7	2616cc	2250		Y
	MG	MGB, MGB GT	1798cc	1850	Y	
	Nissan/Datsun	SRL 311U Roadster	1982cc	2130	Y	
	Nissan/Datsun	240Z	2380cc	2270		Y
	Nissan/Datsun	260Z	2565cc	2450		Y
77-79	Nissan/Datsun	200SX S10	1952cc	2000	Y	
	Nissan/Datsun	200SX SE-R	1998cc	2230		Y
	Nissan/Datsun	240SX S13	2389cc	2530		Y
	Nissan/Datsun	NX 2000	1998cc	2230		Y
90-94	Nissan/Datsun	Sentra SE-R	1998cc	2230		Y
	Porsche	911	1991cc	2000		Y
	Porsche	911	2195cc	2000		Y
	Porsche	912E	1968cc	1920	Y	
	Porsche	914/4	1968cc	1920		
	Porsche	914/6	1991cc	2000		Y
	Porsche	924	1984 cc	2050	Y	
83-88	Porsche	924s/944	2479 cc	2250	Y	
87-88	Porsche	944s	2479 cc	2500	Y	
84-89	Toyota	Corolla GTS	1587cc	2120	Y	
	Toyota	MR-2	1587cc	2120	Y	
	Triumph	TR-2, 3, 4, 4A	1991-2138cc	1870	Y	
	Triumph	TR-4, IRS	2138cc	1920	Y	
85-87	Volkswagen	Golf	1780cc	2000	Y	
87-89	Volkswagen	Cabriolet	1780cc	2130	Y	
85-87	Volkswagen	Cabriolet	1780cc	2030	Y	
82-84	Volkswagen	Jetta	1715-1780cc	2020	N	
	Volkswagen	Rabbit Sedan	1715-1780cc	1990	Y	
	Volkswagen	Scirocco	1715-1780cc	2050	Y	
	Volvo	142, 142E	1986cc	2100	Y	
	Volvo	P1800, S, E, ES, Coupe	1780-1982cc	2100	Y	

Also included in EP

Year	Manufacturer	Model	Disp.	Weight (lbs)	Limited Prep
84-91	BMW	325i/is (E30) (excl. conv.)	2494cc	2050	

Engine type: 6 cyl SOHC; **Bore/Stroke** 84. 1x75.0; **Block –** Iron; **Head Material –** Alum; **Valves In and EX** (I)46.0 (E)38.0; **Trans Spd –** 5; **Brakes –** Factory Spec all 4 wheels **Carb. No & Type –** Original Type fuel injection w/stock un-modified F.I. throttle body **Wheels –** 14x7; **Wheelbase –** 100.9, 101", valve lift limited to .400", restricted suspension. Cylinder head prep to IT specs except that head may be milled to achieve max. comp. ratio. Stock intake manifold only may be port matched on port mating surface to a depth of no more than 1" Manifold may not be otherwise altered. Valves, Keepers, valve springs, and tappets/shims to be ferrous no titanium alloys. Valve lift to be measured with zero lash or clearance. Stock rocker arms, cam followers, rocker ratios, and rocker/follower ratios must be retained. Roller rockers/followers are prohibited. Stock connecting rods req'd, but may be lightened and balanced. Rod bolts may be replaced. Stock crankshaft req'd, but may be lightened and balanced. Rod bolts may be replaced. Stock crankshaft req'd with a max undersize of .045". Billet cranks prohibited. Dry sump is prohibited. Trans must use original case and bell housing in the original locations, but integral components are free (no sequential shifting) competitor must be in possession of factory workshop manual at all competitions.

The following cars are allowed to run in E Production with SCCA Specs:

Year	Manufacturer	Model	Disp.	Weight (lbs)	PCS	Limited Prep
	Porsche	924		2280		
79-85	Mazda	RX-7, 12A & 13B				
	Mazda	RX2, 3, 4	2380cc			
	Nissan	240Z	2270cc			
	Nissan	260Z	2565cc	2450		

7. F Production Specifications

Year	Manufacturer	Model	Disp.	Weight (lbs)	PCS	Limited Prep
90-93	Acura	Integra	1835cc			
		With stock Trans		2235		
		Alt trans with Stock syncros		2291		
		Alt trans with Non-stock Syncros		2347		
	Alfa Romeo	Giulietta Sprint/Spider	1570cc	1918	Y	
	Alfa Romeo	Guilietta Spider Veloce	1570cc	1850	Y	
	A-H/MG	Sprite MK II-IV				
		MG MK1-1500	1275cc	1680	Y	
	BMW	2002 tii				Y
1984-87	BMW	325e/es	2693 cc	2555		
	Fiat 124	Sports Coupe	1592-1756cc	1825	Y	
Thru 77	Fiat 124	Sports Spider	1592-1756cc	1875	Y	
	Fiat	X1/9, Bertone	1498cc	1815	Y	
71-74	Ford	Capri	1993cc	2050	Y	
71-74	Ford	Capri	2301cc	2250	N	
74-78	Ford	Capri	2301cc	2250	N	
	Ford	Cortina 1600, 1600GT	1598cc	1806	N	
79-93	Ford	Mustang	2301	2250	N	
	Ford	Pinto	1993cc	2030	Y	
	Ford	Pinto	2301cc	2250	N	
88-91	Honda	Civic 1.5	1493cc	1950	Y	
88-91	Honda	CRX 1.5	1492cc	1950	Y	
84-87	Honda	CRX, CRX Si	1488cc	1900	Y	
84-87	Honda	Prelude	1829cc	2080	Y	
76	Lancia	Scorpion	1756cc	2030	Y	
	Lotus	Seven (Ford)	997cc	1025	N	
	Lotus	Seven America(BMC)	948-997cc	1045	N	
86-88	Mazda	GLC/323	1597cc	1800		Y
01-03	Mazda	Protégé ES/5	1991 cc	2350		
	Opel	GT	1897cc	1950	Y	
71-75	Opel	Manta	1897cc	1950	Y	
	Porsche	356A, B, C, Super 90 Cab	1488-1582cc	1920	Y	
Thru 69	Porsche	912 Targa/Coupe	1582cc	1950	Y	
	Porsche	914-4	1479-1795cc	2020	Y	
	Sunbeam	Alpine I-IV	1494-1725cc	1976	Y	
	Toyota	Corolla	1588cc	2050	Y	
Thru 70	Triumph	Spitfire MK III	1296cc	1620	Y	
	Triumph	Spitfire MK IV, 1500	1296cc	1600	Y	
	Triumph	Spitfire MKIV, 1500	1493cc	1660	Y	
	Turner	1500	1498cc	1700	Y	
	Volvo	P1800, E, ES Coupe	1780-1982cc	1995	Y	

Year	Manufacturer	Model	Disp.	Weight (lbs)	PCS	Limited Prep
90-93	Mazda	Miata, 1.6L, 4-cyl. DOHC 5-speed	1597cc	2150		Y

Bore – 78.0mm. stroke – 83.6mm. iron block/aluminum head. Intake valve – 31.1mm. Exhaust valve – 26.3mm. Original type fuel injection with stock unmodified throttle body. Wheelbase – 2266mm. Front track – 1479, rear track – 1491. Wheels – 14x7 or 15x7. Factory spec. brakes with no alternate. Compression ratio limited to 10:1. Restricted suspension. Cylinder head prep per I.T. specs., except that head may be milled to achieve maximum compression. Stock intake manifold only may be port-matched on port-mating surface to a depth of no more than on inch. Balance tube may be partially or fully blocked. Manifold may not be otherwise altered. Valve life limited to 0.390". Valves, keepers, springs, and push rods to be ferrous, no titanium alloys. Valve lift measured at zero lash or clearance. Stock rocker arms, cam followers, rocker ratio and rocker follower ratios must be maintained. Roller rockers and roller followers are prohibited. Stock connecting rods are required, but may be lightened and balanced. Rod bolts may be replaced. Stock crankshaft is required with maximum undersize of 0.045". Billet cranks prohibited. Transmission must use original case and bell housing in original position, but internal components are free. No sequential shifting. Competitor must be in possession of factory workshop manual at all competitors.

Year	Manufacturer	Model	Disp.	Weight (lbs)	PCS	Limited Prep
75-84	Volkswagen	Rabbit	1715/1780	2000		

4cyl SOHC, 40 DCN, DCNF, IDF w/38mm choke(s).
Auto-type side draft w/34mm choke(s) on I.R. manifold. 32/36 DGV, DGAV, or original type fuel injection.

Year	Manufacturer	Model	Disp.	Weight (lbs)	PCS	Limited Prep
75-84	Volkswagen	Cabriolet	1715/1780	2080		

4cyl SOHC, 40 DCN, DCNF, IDF w/38mm choke(s).
Auto-type side draft w/34mm choke(s) on I.R. manifold. 32/36 DGV. DGAV, or original type fuel injection

8. G Production Specifications

Year	Manufacturer	Model	Disp.	Weight (lbs)	PCS	Limited Prep
	Alfa Romeo	Guilietta Sprint/Spider	1290cc	1879	Y	
	Alfa Romeo	Junior Z	1290cc	1980	Y	
	Alfa Romeo	Spider 1300	1290cc	1980	Y	
	Austin Healey	Mini Cooper	1275cc	1683	N	
	A-H/MG	Sprite MKI-IV				
		Midget MK1-1500	1098cc	1520	Y	
	BMW	1600	1573cc	2100	Y	
	Chevrolet	Chevette	1598cc	2080	Y	
79-83	Dodge	Colt 1.6 FWD	1597cc	1960	Y	
	Fiat	Abarth	982cc	1540	N	
	Fiat	124 Coupe	1438cc	1975	Y	
	Fiat	124 Spider	1438cc	2025	Y	
	Fiat	X 1/9, Bertone	1290cc	1960	Y	
81-84	Ford	Escort	1589cc	2020	Y	
84-87	Honda	Civic/Si	1488cc			Y
84-87	Honda	CRX/Si	1488cc			Y
88-91	Honda	CRX 1.5	1493cc			Y
	Mazda	GLC (FWD)	1490cc	1920	N	
	MG	A 1500/1600/1622 Coupe	1469cc	2060	Y	
	MG	A 1500/1600/1622 Coupe	1588cc	2060	Y	
	MG	A 1500/1600/1622 Coupe	1622cc	2060	Y	
	MG	A 1500/1600/1622 Roadster	1469cc	1981	Y	
	MG	A 1500/1600/1622 Roadster	1588cc	1981	Y	
	MG	A 1500/1600/1622 Roadster	1622cc	1981	Y	
	MG	A Twin Cam	1622cc	2199	Y	
	MG	B	1798cc	1950		Y
	Nissan/Datsun	210	1397cc	1900	Y	
	Nissan/Datsun	B210	1397cc	1900	Y	
	Nissan/Datsun	PL510	1595cc	2040	Y	
	Nissan/Datsun	SPL 310U	1488cc	1995	Y	
	Nissan/Datsun	SPL 311, 311U	1595cc	2020	Y	
	Porsche	356, A1300, S Cpe, Cab	1286 - 1290cc	1795	Y	
	Porsche	914-4	1795cc	2000		Y
	Suzuki	Swift GT/GTI	1299cc	1870	Y	
	Triumph	Spitfire 4, MK II	1147cc	1680	Y	
	Turner	950S	948cc	1317	Y	
83-84	Volkswagen	Rabbit GTI, GT, GL	1780cc	2165		Y
85-92	Volkswagen	Golf GTI, GT, GL	1780cc	2165		Y
85-89	Volkswagen	Cabriolet	1780cc	2245	Y	
	Volkswagen	Rabbit 1588	1588cc	2090	Y	
	Volkswagen	Rabbit 1588 Cabriolet	1588cc	2190	Y	
	Volkswagen	Rabbit Coupe	1457-1471cc	1780	Y	
	Volkswagen	Scirocco	1457-1471cc	1880	Y	
	Volkswagen	Scirocco	1588cc	2090	Y	
	Volkswagen	Scirocco	1.8L 8v	2165		Y

9. H Production Specifications

Year	Manufacturer	Model	Disp.	Weight (lbs)	PCS	Limited Prep
	Austin Healey	Sprite MK I-IV	948cc	1577	Y	
	Austin Healey	Sprite MK II-IV	1098cc	1500		Y
	Austin Healey	Sprite MK II-IV	1275cc	1535		Y
Thru 73	Fiat	850 Spider, Racer	843cc	1477	Y	
Thru 73	Fiat	850 Spider, Racer	903cc	1477	Y	
	Fiat	Abarth 750 GT/Mille Miglia	1313		N	
	Fiat	X 1/9, Bertone 1300	1290cc	1900		Y
	Fiat	X 1/9, Bertone 1500	1498cc	2000		Y
78-80	Ford	Fiesta	1598cc	1775	Y	
	Honda	Civic	1237cc	1880	Y	
84-87	Honda	Honda Civic, Civic SI	1488cc	1850	Y	
	Mazda	GLC (RWD)	1272cc	1880	Y	
	MG	Midget MK I-IV	948cc	1577	Y	
	Nissan/Datsun	1200	1171cc	1660	Y	
	Nissan/Datsun	PL510	1595cc	2060		Y
	Opel	GT	1078cc	1595	Y	
	Renault	Alliance 1.4	1397cc	1990	Y	
	Renault	R5/LeCar	1397cc	1990	Y	
	Subaru	GL Coupe 1.4	1361cc	1990	Y	
	Toyota	Corolla 1200	1166cc	1660	Y	
	Toyota	Starlet	1290cc	1770	Y	
	Triumph	Spitfire	1296cc			Y
	Volkswagen	Rabbit 1588	1588cc	1900		Y
	Volkswagen	Scirocco 1588	1588cc	1900		Y

10. SP Production Specifications

10.1 Authorized Modifications

10.1.1 Engine, Unrestricted, use of Nitrous Oxide and installation of the bottle is prohibited.

10.1.2 Cooling System, unrestricted except for the rules set forth in ***Automobiles – General Regulations***.

10.1.3 Transmission and final drive, unrestricted except for the rules set forth in ***Automobiles – General Regulations.***

10.1.4 Suspensions, unrestricted except for the rules set forth in ***Automobiles – General Regulations***.

10.1.5 Brakes unrestricted except for the rules set forth in ***Automobiles – General Regulations***.

10.1.6 Wheels and tires, unrestricted except for the rules set forth in ***Automobiles – General Regulations***.

10.1.7 Body structure, unrestricted except for the rules set forth in ***Automobiles – General Regulations***.

10.1.8 Driver/Passenger Compartment and or trunk, unrestricted except for the rules set forth in ***Automobiles – General Regulations***.

10.1.9 Safety, all cars shall conform with the safety section set forth in this section

GT Categories

GT Category

1. GCR

These specifications are part of the MCSCC General Competition Rules (GCR) and all automobiles shall conform with GCR ***Automobiles – General Regulations***.

2. Purpose:

The GT Category is intended to provide the membership and interested manufacturers with the opportunity to complete in purposes built, highly modified replicas of series produced automobiles. To that end, cars shall be classified in GT Classes based on their competitive potential. The club may alter or adjust specifications and require, permit or restrict certain specific components to equate potential.

3. Intent:

It is the intent of these rules to allow modifications useful and necessary in the construction and preparation of an extremely-high-performance road racing vehicle. It is understood that such a vehicle can be updated and/or changed from marque-to-marque, based on member interest and manufacturer incentive. With this in mind, the Club will use the following guidelines in determination of the suitability for classification in the GT Category.

3.1 Basic vehicle size, shape, engine displacement and cylinder head design of the standard and or alternate engine(s).

3.2 Member interest.

3.3 Manufacturer interest and potential support to competitors.

3.4 Vehicle production quantities of no less than 3,000 units of the specified make and model within a twelve (12) month period, all such units being approved by the EPA and DOT for sale in the United States (Production Cars that have been reclassified into the GT Category need not meet minimum production quantities.

4. Specifications

The MCSCC will utilize the appropriate SCCA® Specification book for each car eligible for the calendar year. Cars shall be listed according to the manufacturer's make and model designation. In the case of doubt involving specifications not adequately described in the GTCS, Technical Inspectors/Stewards may refer to maintenance manuals; spare parts books, general catalogs and performance catalogs published by the vehicle manufacturer, MVMA specifications, and FIA Homologation Certificates for the make and model or may inspect other cars of the same make and model.

4.1 Cars prepped and classed in SCCA GT1 or GT2 and having a SCCA log book are eligible in MCSCC GT1 or GT2 classes respectively and may compete for a season championship provided the driver is a member.

4.1.1 Cars must pass MCSCC safety rules per GCR.

4.1.2 MCSCC is not responsible for SCCA GCR compliance. Participants are responsible to provide SCCA GCR in the event of rules protests.

4.1.3 The most recent log entry cannot be older than two years

4.2 GT Category automobiles shall be divided into Classes based on relative performance as follows: GT-1, GT-2, GT-3, GT-4 and GT-5

4.3 Cars may be updated or backdated within the specifications of the recognized make and model as listed on the Approved List of the GTCS (GT-1), or as on a single GT Specification Form page of the GTCS (GT-2/3/4/5).

4.4 No permitted component/modification shall perform a prohibited function.

4.5 Turbocharging/Supercharging is not permitted.

4.6 Construction of tube frame cars is permitted. Standard maximum track dimensions for all cars unless otherwise noted are as follows:

4.6.1	GT-1	70.0"	Front & Rear
4.6.2	GT-2	64.0"	Front & Rear
4.6.3	GT-3	60.0"	Front & Rear
4.6.4	GT-4	60.0"	Front & Rear
4.6.5	GT-5	60.0"	Front & Rear

4.6.6 GT-1 cars refer to Sections of the GT-1 Rules for wheelbase restrictions.

4.7 Those dimensions given with no decimal point are considered to be absolute, e.g., 20mm shall measure less than or equal to 20.00mm and 2" shall measure less than or equal to 2.000". Those dimensions expressed with a decimal point are considered to have been rounded down from the next decimal number, e.g., 1.86" shall measure less than or equal to 1.864.

4.7.1 Weight is absolute minimum.

4.7.2 Track is absolute maximum.

4.7.3 Venturi size is absolute maximum.

4.7.4 Rim width is an absolute maximum.

5. Authorized Modifications (GT-1)

5.1 Engine (GT-1)

5.1.1 Component Modification

5.1.1.1 It is permitted to lighten, balance or modify in shape by mechanical means, the standard, optional or alternate components of the engine, provided it is always possible to positively identify them as such.

5.1.1.2 Material shall not be added to these components unless specifically authorized by these rules.

5.1.1.3 The original direction of engine rotation shall be retained.

5.1.2 Induction System

5.1.2.1 All inducted air shall pass through the throttle venturis.

5.1.2.2 The specified carburetor(s) or specified fuel injection may be modified. The number, model, type, throttle bore and/or venturi restriction shall remain as specified. Refer to Section of these rules for additional induction specifications.

5.1.2.3 Any air filter(s) velocity stack(s) and/or air box(es) may be fitted. Air may be ducted to the carburetor or fuel injection system provided that the ducting is completely contained within the engine compartment and that the air to be ducted is supplied through normal (or as specifically authorized herein) openings in the bodywork. Cars may duct air to the carburetor airbox through and opening in the back of the hood, rectangular in shape, maximum width of 20 inches, maximum length of 3.5 inches.

5.1.2.4 Intake manifolds are unrestricted.

5.1.2.5 Any throttle linkage may be used. All throttle linkages shall be equipped with more than one system of positive throttle closure.

5.1.3 Fuel System

5.1.3.1 Any fuel line(s) may be used. All fuel line(s) passing through the driver/passenger compartment shall be made of metal braided hose with AN-Series threaded couplings.

5.1.3.2 Any fuel pump(s) and pressure regulator(s) may be used. Such components may not be located in the driver/passenger compartment, but their location within the bodywork of the car is otherwise unrestricted.

5.1.4 Emission Equipment

5.1.4.1 Exhaust emission control equipment shall be removed in its entirety. Where air injection nozzles are removed from the cylinder head, the resultant holes shall be completely plugged.

5.1.5 Cylinder Heads: (GT-1)

5.1.5.1 The standard production, optional of specified alternate(s) cylinder head(s) shall be used. Any valve guides and valve seats may be used.

5.1.5.2 Material(s) may be added to the combustion chamber(s) and interior ports/passages of the cylinder head(s). The addition of such material(s) shall not enable the combustion chamber and/or interior ports/passages to be moved external to the original physical limitations of the cylinder head(s).

5.1.5.3 V-6 and V-8 General Motors engines are permitted: Buick, Oldsmobile, Pontiac, Brodix, Brownfield, Dart Pro Action 14 degree or Edelbrock cylinder heads of cast iron or aluminum. Any cylinder head(s) utilized shall be of a conventional design (Siamese intake ports, two (2) valves per cylinder, all valves inline), direct replacement type.

5.1.5.4 V-6 and V-8 Ford engines are permitted: Ford Motor sports SVO inline-valve or canted-valve cylinder head(s) or cast iron or aluminum.

5.1.5.5 V-6 and V-8 Chrysler engines are permitted: MOPAR Performance conventional design (Siamese intake ports, two (2) valves per cylinder, all valves inline), direct replacement type.

5.1.6 Camshaft and Valve Gear

5.1.6.1 Any camshaft(s) mounted in the standard location(s) may be used. Any cam followers may be used. Springs and mounting hardware which act directly on the cam followers may be added.

5.1.6.2 Camshaft drive mechanism is unrestricted.

5.1.6.3 Push rods, rocker arms, and rocker arm supports are unrestricted.

5.1.6.4 Valves are unrestricted.

5.1.6.5 Valve springs, retainers, keepers and seals are unrestricted.

5.1.7 Block

5.1.7.1 The standard production, manufacturer's heavy duty (of the same basic materials as the original block), or specified alternate engine block shall be used.

5.1.7.2 The block may be bored and/or sleeved to achieve the correct displacement.

5.1.7.3 The block may be machined, and O-rings may be added to replace or supplement head gasket(s).

5.1.7.4 The crankshaft main bearing caps may be substituted. Addition bearing caps and/or bolts may be used provided that no material is added to the block for their attachment.

5.1.8 Pistons and Rods

5.1.8.1 Pistons and piston pins are unrestricted. The compression ratio is unrestricted.

5.1.8.2 Connecting rods are unrestricted, provided that they are made of a ferrous material, e.g., steel. Aluminum, titanium, graphite, etc., rods are prohibited.

5.1.9 Crankshaft and Flywheel

5.1.9.1 The crankshaft is unrestricted, provided it is made of the same basic materials as the standard production crankshaft. Those vehicles originally equipped with an iron crankshaft may use a steel crankshaft. All alternate crankshafts shall retain the same angle(s) or crank throws as the original crankshaft.

5.1.9.2 The use of any crankshaft vibration damper is permitted.

5.1.9.3 The use of any flywheel and clutch is permitted,

5.1.10 Oiling System

5.1.10.1 The use of any oil pan (sump), oil pump(s), and/or oil pickup(s) is permitted. Oil pump(s) shall be mechanically driven by the engine. Dry sump systems are permitted. Any oil tank(s) used by such a system shall be located within the bodywork and any oil lines utilized within the system shall be metal braided, equipped with AN-Series threaded couplers.

5.1.10.2 The use of any oil filter(s) is permitted.

5.1.10.3 The oil tank(s), cap(s), oil filter(s) and any fittings attached thereto shall be isolated by a metal bulkhead(s), so that in the event of any spillage, leakage or failure, oil will not reach the driver. Refer to Section 5.10.9.1 of these rules for additional safety requirements for the oiling system.

5.1.11 Electrical System

5.1.11.1 The use of any driver operated electrical starter is permitted.

5.1.11.2 The use of any ignition system (except magneto ignition) is permitted, provided the number of spark plugs remains the same as that of the standard production, optional cylinder head(s). Driver-controlled adjustable spark timing is prohibited.

5.1.11.3 The remaining components of the engine electrical system are unrestricted. Refer to Section ***5.10.4.1*** and ***5.10.4.2***, for additional safety requirements for the electrical system.

5.1.12 Exhaust System

5.1.12.1 The components of the system are unrestricted. Refer to Sections ***5.8.1.3.2*** and ***5.8.1.9.2***, of these rules for additional exhaust system and bodywork specifications.

5.1.13 Other Engine Components

5.1.13.1 Alternate engine components considered replacement parts, such as seals, bearings, water pumps, nuts, bolts, studs, washers and gaskets are permitted. Bushings or offset keys of unrestricted origin may be installed.

5.1.13.2 Generators/alternators, crankshaft and water pump pulleys are unrestricted.

5.1.13.3 Engine mountings are unrestricted.

5.1.13.4 Cars with the engine mounted longitudinal to the chassis may relocate the engine in a longitudinal direction, centered along the longitudinal center-line of the vehicle as define by the track. A one (1) inch transverse deviation tolerance from the absolute center-line is permitted. Unless otherwise fitted in its standard production location or specifically authorized in the vehicle's GTCS specifications, said relocation shall align the center of the foremost spark plug hole with front axle center-line.

5.1.13.5 Transverse-mounted engine may be relocated for axle/CV joint alignment. Alternately, they may be relocated to a longitudinal position if authorized specifically by the GTCS.

5.1.13.6 General Motors, Ford and Chrysler front mounted V-6 engines may be positioned so that the center of the foremost spark plug hole is no more than 4.5 inches behind the front axle center-line (bellhousing and transmission locations are the same as a V-8 engine).

5.2 Engine, Rotary Piston (GT-1)

5.2.1 Component Modifications

5.2.1.1 Rotary piston engines in GT-1 may be prepared using GTCS specifications.

5.2.1.2 The standard production or specified alternate rotor housing shall be used. No changes in the epitrochoidal curve of the engine is permitted.

5.2.1.3 The capacity of the working chamber(s) shall not be changed.

5.2.1.4 The eccentric shaft may be replaced with another of the same basic material, but no changes in its eccentricity or bearing journal dimensions are permitted.

5.2.1.4.1 The rotor(s) is/are unrestricted, provided the material and number of lobes remains un-changed.

5.3 Cooling Systems

5.3.1 Radiator

5.3.1.1 Any water radiator is allowed, provided that there are no changes to the exterior bodywork to accommodate its use. It shall not be located in the driver/passenger compartment. Radiator overflow line(s) shall terminate in a catch tank. Separate expansion or head tank(s) are permitted. Any such tanks shall not be located in the driver/passenger compartment.

5.3.1.2 The heater core and all attendant heater controls, lines and accessories may be removed in their entirety, but shall not be modified or replaced.

5.3.2 Radiator Fan

5.3.2.1 The cooling fan(s) may be modified, substituted or removed.

5.3.2.2 Electrically-operated cooling fan(s) may be installed, provided it/they serve no other purpose.

5.3.3 Radiator Shroud/Ducting

5.3.3.1 The original radiator shroud may be altered, removed or replaced.

5.3.3.2 Sealing or shrouding the airflow area between the normal grill opening and the water radiator is permitted.

5.3.4 Water Pump

5.3.4.1 The water pump(s) may be replaced with any other water pump(s) mechanically driven by the engine.

5.3.5 Thermostat

5.3.5.1 The thermostat(s) may be modified or replaced with blanking sleeves or restrictors.

5.3.6 Oil/Lubricant Coolers

5.3.6.1 The use of any engine, transmission and differential cooler(s) is permitted, provided that it/they are mounted within or under the bodywork, but not in the driver/passenger compartment.

5.3.6.2 Associated cooler pumps and lines are permitted for transmission and differential coolers.

5.3.6.3 Air may be ducted to said coolers only through normal openings in the bodywork. Air ducts or other openings shall be added to body parts only where specifically authorized by these rules. Refer to Section ***5.8.1.12***, of these rules for additional ducting specifications.

5.3.6.4 Air may be ducted to the rear brakes and rear mounted coolers from an interior bulkhead behind the driver. Air may be ducted to these components from free air under the car; provided that such under-car ducting does not create “ground effects”. Refer to Section ***5.6.1.3***, for additional brake ducting specifications.

5.4 Transmission/Final Drive (GT-1)

5.4.1 Component Modification

5.4.1.1 It is permitted to lighten, balance or modify in shape, by any mechanical or chemicals means, the standard optional or alternate components of the transmission and final drive, provided that it is always possible to identify them as such.

5.4.2 Transmission

5.4.2.1 Automatic transmissions are not permitted unless specifically authorized on a vehicle’s GTCS page.

5.4.2.2 Any readily available manual transmission having no more than five (5) forward speeds and an operable reverse may be used, provided that it is fitted in the same basic location used in the standard production automobile. Any relocation or repositioning of the transmission-to-engine dimensional relationship shall be specifically authorized by the GTCS. Sequential shifting transmissions are permitted with a 75lb weight penalty. Air, hydraulic, or electric actuation of the gearshift mechanism is not allowed.

5.4.2.3 Front engine/transmission vehicles shall locate the front mounting surface of the transmission within sixteen (16) inches of the back of the engine block.

5.4.2.4 Any shift linkage may be used.

5.4.2.5 The linkage between the clutch pedal and the clutch housing/clutch actuating mechanism is unrestricted. A mechanical linkage may be replaced with a hydraulic system.

5.4.2.6 Transmission mountings are unrestricted.

5.4.3 Final Drive

5.4.3.1 Any axle tube, final drive housing, gear ratio, limited slip or locked differential may be used. Final drive units which permit ratio changes while the car is in motion are prohibited.

5.4.3.2 Heavy-duty propeller shaft(s) and/or drive shaft(s) may be used. A minimum or two (2) steel 360 degree “loops” shall be installed of sufficient strength to prevent the drive shaft(s) from contacting the ground in the event of shaft and/or U-joint failure. Said loops shall be located within twelve (12) inches from the front of the shaft and as close as practical to the rear of the universal joint.

5.5 Suspension (GT-1)

5.5.1 Ride Height

5.5.1.1 No part of the car to the rear of the front tire opening, including the exhaust, may touch the ground when two (2) tires on the same side of the vehicle are deflated.

5.5.2 **Suspension Components**: Suspension Components may be reinforced, modified or replaced with units of alternate design, and their mounting points may be relocated. The addition or substitution of anti-roll bars, camber compensating devices, and/or suspension stabilizers are permitted. If these devices or any other suspension components extend into the driver/passenger compartment, they shall be completely sealed off from said compartment by metal panels.

5.5.2.1 Hubs, bearings, spindles, axles, U-joints, CV joints, bushings, ball joints and rod ends may be freely modified or substituted.

5.5.2.2 The wheelbase of the automobile shall not be changed or relocated in the fore/aft direction. A tolerance of +/- 2.00 inches from the published specifications shall be permitted unless otherwise noted in the GTCS.

5.5.3 Springs/Shock Absorbers

5.5.3.1 Suspension springs may be replaced with other of unrestricted origin and type.

5.5.3.2 Shock absorbers are unrestricted, except that the number of shock absorbers fitted shall not be changed from that of the standard production automobile.

5.5.3.3 Shock absorber mountings are unrestricted.

5.5.4 Suspension Control

5.5.4.1 The manufacturer’s basic system of front suspension shall be retained, i.e., independent. Strut-type front suspension may be replaced with a double A-arm type suspension.

5.5.4.2 The manufacturer’s basic system of rear suspension may be retained, i.e. independent, live axle, etc. All forms of independent rear suspension may be replaced with a closed tube beam, live axle suspension. Cars originally equipped with live axle rear suspension shall not replace said suspension with any type of independent suspension.

5.5.4.3 Automobiles originally manufactured as Front Wheel Drive vehicles may convert to Rear Wheel Drive, but shall only use a close tube beam, live axle rear suspension.

5.5.5 Steering

5.5.5.1 The front wheel only shall be steered by the driver.

5.5.5.2 The type of steering is unrestricted, provided that a collapsible type of steering column is used. Refer to Sections ***5.9.2.1*** and ***5.10.2.1***, of these rules for additional steering specifications.

5.6 Brakes (GT-1)

5.6.1 Brake components

5.6.1.1 The use of any dual master cylinder and/or pressure equalizing device is permitted. All cars shall be equipped with a dual braking system operated by a single control. In the case of leakage or failure to any point in the system, effective braking power shall be maintained to at least two (2) wheels.

5.6.1.2 Servo-assist braking systems are unrestricted.

5.6.1.3 Backing plates or shields may be removed. Brake air ducts may be fitted, provided they extend only in a forward direction, and that no changes are made to the bodywork for their installation. Refer to Section ***5.3.6.4*** of these rules for additional brake duct specifications.

5.6.1.4 Parking brakes may be removed.

5.6.1.5 The brake lines shall be steel tubing, metal-braided hose or flexible brake hose. Lines may be relocated and given additional protection.

5.6.1.6 Brake discs, calipers and/or drums are unrestricted, provided that the discs or drums are mounted in the same location (e.g., outboard vs. inboard) as the standard production automobile.

5.6.1.7 Water spray brake cooling systems are permitted. No water-cooled calipers are permitted.

5.6.1.8 Carbon brake rotors are prohibited.

5.7 Wheels and Tires

5.7.1 Wheels

5.7.1.1 Wheels shall be made of steel, aluminum, magnesium or a combination thereof. Multi-piece wheels shall utilize mechanical fasteners (bolts, rivets, etc.) for assembly.

5.7.1.2 Wheels may be thirteen (13), fourteen (14), fifteen (15) or sixteen (16) inches in diameter, but all four (4) wheels shall be of the same diameter.

5.7.1.3 Wheels shall have a maximum width of twelve (12) inches.

5.7.1.4 Center lock or quick-change wheels are permitted.

5.7.2 Tires

5.7.2.1 Tires are unrestricted, except that they must meet the requirements of ***Automobiles – General Regulations*** Section ***9.3.4***.

5.8 Body/Structure

5.8.1 Configuration/Modifications

5.8.1.1 The intent of these bodywork/configuration rules is to maintain the recognizable external features of the standard production automobile while providing for necessary safety and performance modifications.

5.8.1.1.1 Lightening of the bodywork is permitted, but the exterior shape of the body shall not be changed except where specifically authorized herein.

5.8.1.1.2 The method of bodywork attachment is unrestricted.

5.8.1.1.3 Maximum overall car width shall not exceed 84.75 inches.

5.8.1.1.4 Approved Trans AM body and wheelbase specifications are allowed unless otherwise specifically prohibited by these rules.

5.8.1.1.5 Convertible and removable tops and all attaching hardware shall be removed from open cars.

5.8.1.2 Any bodywork components may be fabricated of alternate material(s), provided that their shape remains as specified herein, unless specifically prohibited elsewhere in these rules.

5.8.1.3 Fenders may be flared for tire clearance, provided that their shape and opening contour in horizontal projection is similar to the original opening.

5.8.1.3.1 Modified wheel opening(s) shall not confuse the identity of the car. The fenders flares shall completely cover the wheels and tires, and may extend into the doors and bumpers.

5.8.1.3.2 Rear fenders may have holes or slots to accommodate exhaust outlets. These holes or slots shall be below a line seven (7) inches above the bottom of the rocker panel, and shall be no wider than seven (7) inches.

5.8.1.3.3 The inner fender panels separating the wheel wells from the engine compartment may be altered, replaced or removed, provided that there are panels which provide total separation between the wheel wells and the driver/passenger compartment.

5.8.1.4 The hood and deck lid/trunk hinges and latches may be removed. The hood and deck lid/trunk may be “molded in” with other bodywork components to create “one-piece” front and rear ends. Misalignments or modifications to create ventilation openings where none previously existed are prohibited.

5.8.1.4.1 The hood may be modified for clearance of an air box, provided that such alteration does not confuse the identity of the car.

5.8.1.5 Bumpers that are not part of the bodywork may be removed, providing that all projecting hardware is also removed. Alternately, they may be replaced with replicas of alternate material(s). In those cases where bumpers are an integral part of the bodywork, they may be replaced with replicas of alternate material(s). Bumper bracket holes in the bodywork may be covered, provided such covering serves no other purpose.

5.8.1.6 The standard grille(s) or approved facsimile(s) shall be retained, except where covered by the front spoiler or intermediate spoiler mounting device.

5.8.1.7 The original angle of the windshield shall be maintained unless alternate components and/or specifications are specifically authorized in the specifications.

5.8.1.8 All cars may use a standard safety glass windshield, mounted in the stock location and at the stock angle. In addition to any other method of retention, the windshield shall be secured within the specifications “Windshield Clips.” Windshields of alternate material (i.e., Lexan MR-5/MR-7/MR-10 or FMR-102) are permitted. Alternate material windshields must be of 6mm minimum thickness. Alternate material windshields must be identical in size and curvature to the original glass component. Polycarbonate windshields may be retained using straps and/or fasteners per SCCA Pro Racing rules. Alternate material windshields must have in addition three (3) inner supports to prevent the windshield from collapsing inward. These supports must be 0.75” by .125” minimum straps of aluminum. Spacing between these inner supports must be eight (8) inches minimum.

5.8.1.9 The rear quarter (side) and rear windows may be made of clear, transparent and uncolored polycarbonate material having a minimum thickness of 0.125 inches.

5.8.1.9.1 In addition to any other method of retention, all rear windows shall be secured with the same specifications for windshield retention clips.

5.8.1.9.2 NACA ducts may be added to the rear quarter windows.

5.8.1.10 Doors

5.8.1.10.1 Driver and passenger door window glass or plastic shall be removed. Inside door handles, door panels, window cranks and mechanisms, and other interior trim pieces may be removed.

5.8.1.10.2 The doors shall be pinned or otherwise positively fastened to prevent their opening in the event of an accident. Standard door hinges and latches may be removed, but the doors shall remain capable of being opened or removed.

5.8.1.10.3 Doors may contain holes or slots to accommodate exhaust outlets. Any such openings in the doors shall be below a line seven (7) inches above the bottom of the rocker panel, and shall be no wider than seven (7) inches. A maximum of two (2) such exhaust openings are permitted in the door.

5.8.1.11 Spoilers

5.8.1.11.1 A front spoiler may be fitted. It shall not protrude beyond the overall outline of the car as viewed from above, or aft of the forward most part of the front fender opening (cutout), and shall not be mounted more than four (4) inches above the horizontal centerline of the front wheel hubs. The spoiler shall not cover the normal grill opening at the front of the car. An intermediate mounting device may be used on cars whose front bodywork is above the four (4) inch minimum. Openings are permitted for the purpose of ducting air to the brakes, radiator, air box, and/or cooler(s): equal openings may be placed in the standard lower front panel directly behind openings placed in the spoiler. Joint separations need not be shown. The spoiler “pan” area forward of the leading edge of the front wheel openings shall be flat and follow, but not exceed, the line of the forward of the leading edge of the front wheel openings shall be flat and follow, but not exceed, the line of the front fender/spoiler bottom. No components may protrude or extend below this plane.

5.8.1.11.2 Only a flat plane rear spoiler, contiguous with the rear bodywork rearward of the rear window, shall be permitted. It shall comply with the following:

5.8.1.11.2.1 **Height**: No higher than eight (8) inches, measured from the bodywork along the face of the spoiler, from the point of attachment to the top edge conforming to the shape of the bodywork (rearview), the measurement is to be made perpendicular to the tangent of the body at the point of attachment. In the case of a spoiler mounted with a vertical mounting flange on the rear face of the bodywork, the measurement shall be made ignoring any slight amount of curvature of the rear bodywork at the point of attachment.

5.8.1.11.2.2 **Width and Overhang**: No wider than the body, excluding fender flares, from the forward most point of the spoiler (or mounting flanges) rearward. It shall not extend rearwards of the rearmost extremity of the bodywork for the entire width of the car (when viewed vertically from above the car at any point, the spoiler shall not protrude beyond the bodywork).

5.8.1.11.2.3 **Mounting**: Spoilers shall be strong enough to be self-supporting, and shall be mounted directly to the rear hatch, deck or trunk lid. A mounting flange no greater than one and one-half (1-1/2) inches wide, contiguous with the bodywork (either forward-facing on the top surface of the bodywork or downward-facing on the rear surface of the bodywork) shall be employed. No other forward-facing sheet metal supports are permitted. Supplemental bracing may be added in the form of two (2) rods (maximum diameter one-quarter (1/4) inch), mounted at least ten (10) inches inboard from the ends of the spoiler. Small rear supports may be added.

5.8.1.11.2.4 **Configuration**: The spoiler shall be a single-plane spoiler (a straight line in any vertical cross-section), uniform in height from the rear bodywork. There shall be no gaps or openings below the spoiler for its entire width. Only enough curvature (in a fore-and-aft direction as viewed from above) shall be permitted to facilitate mounting. The use of fences, end rails, gurney lips, wicker bills or other forward facing lips or aerodynamic devices is prohibited.

5.8.1.11.2.5 **NOTE**: Wing assembly specs: Unmodified single element Liebeck airfoil #1LD104E scaled to a chord length of 10.75 inches. The maximum cross-sectional tolerance of the wing profile is 0.060 inch. A maximum 0.50 inch Gurney tab is allowed at the trailing edge of the wing element. The tab must be mounted 90 degrees to the upper wing surface. No air may pass between the tab and the wing. The wing end plates must fit within a rectangle measuring 11.00 inches long by 4.00 inches tall. No portion of the wing element or tab may extend beyond the perimeter of the endplate. The endplates may be mounted parallel to the vehicle centerline, and must be perpendicular to the ground. Endplates must be flat, with no curvature or Gurney tabs. The maximum width of the entire wing assembly (wing element, endplates, Gurney tab, and mounting hardware) is 72.00 inches.

5.8.1.11.2.6 **Wing mounting specs**: The entire wing assembly must be mounted at least 2.00 inches below the peak of the roof (measured at vehicle centerline). Trailing edge of wing assembly must be located within an area defined by a point: 6 inches forward of rearmost bodywork and the rearmost bodywork (measured at vehicle centerline). Two wing mounting posts must be used, with each one located between 16 to 20 inches inboard from end of wing. Max. wing angle from horizontal is 30 degrees.

5.8.1.12 Glass/plastic headlights, front parking and signal lights, lenses and bulbs shall be removed. Other front lighting parts and ancillaries may be removed. Headlight, front parking and signal light and similar standard openings

in the front of the car may be used for ducting air to the engine, front brakes, and/or coolers. Such ducting may pass through interior panels for these purposes.

5.8.1.12.1 The cross sectional area of a single duct shall not exceed the cross sectional area for the original (single) headlight lens.

5.8.1.12.2 It is not permitted to relocate the standard openings for headlights, signal lights, etc. The headlight openings shall be covered with a wire screen or a panel of an alternate material, provided that such covering does not confuse the identity of the car.

5.8.1.12.3 The side marker light assemblies shall be removed, and the resultant openings shall be completely closed.

5.8.1.13 The windshield wiper system is unrestricted.

5.8.1.14 Floors

5.8.1.14.1 Driver/Passenger Compartment: The floor of the driver/passenger compartment shall maintain the basic shape and position of the original floor, i.e. flat and horizontal, relative to the car and rocker panels. It may not be curved, angled, recessed or channeled other than as specifically authorized by these rules, and shall be made of steel and/or aluminum only.

5.8.1.14.1.1 On the passenger side of the driver/passenger compartment (only), the floor may be raised up to ten (10) inches, or a secondary floor installed at that level, to accommodate the installation of the exhaust system and mufflers. Such rising of the floor shall serve no other purpose.

5.8.1.14.1.2 The driver/passenger compartment floor shall cover the area from the forward firewall the full width between the rocker panels, and shall extend no further aft than the forward most point of the rear wheel openings. The floor panels between the rocker panels and the outboard frame rails may be cut out or removed.

5.8.1.14.1.3 Floor panels between the engine bay firewall and the forward most point of the front wheel openings are prohibited.

5.8.1.14.2 The fuel cell bottom and/or floor behind the rear wheel opening shall be flat, angled upwards, and shall follow, but not exceed, the line of the rear fender bottom.

5.9 Driver/Passenger Compartment – Trunk (GT-1)

5.9.1 Seating

5.9.1.1 All standard production seats and seat backs shall be removed. The driver's seat shall be replaced with a seat suitable for racing.

5.9.1.2 The driver's seat shall be located on the left side of the vehicle, and shall be located so that another seat of equal dimensions could be fitted to the passenger side of the car.

5.9.2 Steering Wheel

5.9.2.1 Any steering wheel and wheel quick-release mechanism may be used.

5.9.3 Gauges/Accessories/Driver Convenience

5.9.3.1 The replacement, addition or removal of accessories (gauges, switches, indicators, etc.) is permitted. Such installations and/or modifications shall have no influence on the mechanical performance of the car. Similarly, they shall not include the substitution or replacement of any element of the bodywork or chassis except where specifically authorized by these rules.

5.9.3.2 Fresh-air ducts to the driver may be added to the A-pillars area. The ducts shall be distinctly separate parts from the bodywork.

5.9.3.3 The use of any mirror(s) is permitted.

5.9.4 Interior Modifications – Firewall/Bulkheads

5.9.4.1 Modifications may be made to the driver/passenger compartment for the convenience of the driver and to permit the installation of required safety equipment. Such modification shall have no influence on the mechanical performance of the car. Similarly, they shall not include the substitution or replacement of any element of the bodywork or chassis except where specifically authorized by these rules.

5.9.4.2 Floor mats, upholstery, and all interior trim shall be removed.

5.9.4.3 There shall be a fire wall between the driver/passenger compartment and engine compartment. It shall be made of steel and/or aluminum and shall be transversely positioned in the approximate location of the original.

5.9.4.3.1 It shall extend, at a minimum, from the left outboard frame rail and at maximum from the left outer door skin to the outer door skin.

5.9.4.3.2 It shall be designed, in conjunction with the floor and driver/passenger compartment interior panels and bulkheads, to prevent the passage of and isolate the driver from flame, fluids and debris.

5.9.4.4 There shall be a steel and/or aluminum bulkhead completely separating the driver/passenger compartment from the compartment containing the fuel cell.

5.9.4.4.1 The forward most element of this separation shall consist of a vertical transverse bulkhead behind the driver, extending the full width of the compartment from the floor to the top of the door.

5.9.4.4.2 Behind this rear bulkhead there shall be a steel and/or aluminum horizontal bulkhead the full width of the interior of the car, or between the inner fenders extending from the vertical bulkhead to the rear of the fuel cell.

5.9.4.4.3 These two (2) bulkheads shall, together, completely cover and isolate the fuel cell, rear suspension, coolers, ducting, etc., so that none of these items are visible when viewed from above. The fuel cell shall also be covered and isolate unless the car is equipped with the optional bulkhead listed in 5.9.4.5.

5.9.4.4.4 All fuel filler, overflow, vent, discriminator or return lines or components that extend beyond the limits of the vertical or horizontal bulkheads into the driver/passenger compartment shall be metal, metal braided line or independently shielded with an additional steel and/or aluminum bulkhead.

5.9.4.5 An additional vertical transverse bulkhead is permitted behind the driver. It shall be located above the mandatory vertical bulkhead and shall allow the driver adequate vision to the rear. It is recommended that this additional bulkhead be made of clear transparent polycarbonate material.

5.9.5 Trunk (does not apply)

5.10 Safety (GT-1)

5.10.1 Roll Cage

5.10.1.1 The chassis shall be completely constructed of steel tubing. Monocoque or semi-monocoque methods of construction are prohibited, except in the case of a vehicle constructed using the original unibody. In all cases, the chassis shall incorporate a full roll cage meeting the requirements of GCR ***Appendix ZZ***, "Roll Cages".

5.10.1.2 NASCAR type side door bars are strongly recommended.

5.10.1.3 Removable roll cages and/or bracing are prohibited. The roll cage shall be a fully welded, integral part of the chassis.

5.10.1.4 All cars constructed after January 1, 1988 shall meet the roll cage tubing size requirements of GCR ***Appendix ZZ***, specified for cars weighing more than twenty-five hundred (2500) pounds.

5.10.2 Steering Columns/Locks

5.10.2.1 The steering column shall be a collapsible type, either by layout design or by column construction.

5.10.3 Fuel Cell

5.10.3.1 A fuel cell complying with GCR ***Appendix X***, "Safety Fuel Cell Specifications", shall be fitted.

5.10.3.2 The maximum fuel cell capacity shall be one hundred and twenty (120) liters (31.68 gallons U.S.).

5.10.3.3 No part of the fuel cell shall be closer to the ground than six (6) inches, unless contained within the basic structural frame rails of the vehicle and located forward of the rear axle.

5.10.3.4 The fuel cell shall be located in approximately the same location as in the original vehicle, or may be relocated behind the rear axle. It shall not be located within the protected area of the driver/passenger compartment unless specifically authorized in the GTCS.

5.10.4 Kill Switch/Battery

5.10.4.1 A master electrical system cutoff switch meeting the specifications of ***Automobiles – General Regulations*** Section ***9.3.23.1***, "Master Switch" is required.

5.10.4.2 The battery is unrestricted.

5.10.5 Driver's Restraint System

5.10.5.1 A safety harness meeting the specifications of ***Automobiles – General Regulations***, is required.

5.10.5.2 Three (3) inch wide shoulder harness straps or three (3) inch wide padding on the shoulder straps is required. 2 inch width shoulder belts are permitted only when a Hans type device is used.

5.10.5.3 A driver's side window net is required.

5.10.6 Fire Systems

5.10.6.1 A fire system meeting the specifications of Automobiles – General Regulations.

5.10.6.2 The minimum capacity of the fire system shall be ten (10) pounds.

5.10.6.3 The system outlets/nozzles shall be directed to the driver in the driver/passenger compartment, and to the fuel cell, pump(s), etc., in the fuel cell compartment. An additional outlet/nozzle directed to the engine compartment/bay is recommended.

5.10.7 Scatter shields

5.10.7.1 A scatter shield is required.

5.10.8 Brake Lights

5.10.8.1 Two (2) operating brake lights and two (2) operating tail lights are required at the rear of the car.

5.10.8.2 The original tail light and brake light lenses shall be retained, and shall be located in their original positions.

5.10.9 Hoses/Lines

5.10.9.1 All fuel, oil and coolant lines (including those lines that perform fill, overflow, vent, return, etc., functions) which pass through the driver/passenger compartment shall be made of metal or metal-braided hose, and shall be equipped with AN-Series threaded couplers.

5.10.9.2 No oil line located to the rear of the transverse engine compartment firewall shall be located in a compartment or otherwise restricted area which also contains any component of the exhaust system.

5.10.10 Towing Eyes

5.10.10.1 All cars shall be equipped with towing eyes or straps.

5.10.11 Vents/Breathers/Catch Tanks

5.10.11.1 The installation of any vent or breather on the engine, transmission, or final drive is permitted.

6. Approved Automobiles/Notes

6.1 Notes (GT-1)

6.1.1 Carburetors/Fuel Injection

6.1.1.1 All cars shall use a single Holley Model 4150 carburetor, restricted to one and eleven-sixteenths (1-11/16) inch throttle bore, unless alternate carburetion and/or dimensions are specified in the GTCS.

6.1.1.2 Unless otherwise specified or permitted by the GTCS, fuel injection is prohibited on GT-1 automobiles.

6.1.1.3 Pushrod V-6 engines may run a single Holley Model 4500 carburetor, but the minimum weight shall be increased to that of the same displacement fuel injected car.

6.1.1.4 V-8 engine cars with engine displacement of greater than 366 cubic inches (6.0 liters) shall use a one and three-eighths (1-3/8) inch throttle bore restrictor plate, mounted beneath the carburetor, as specified in the diagram.

6.1.1.5 Refer to Sections ***5.1.2*** and ***5.1.3*** of these rules for additional induction system specifications.

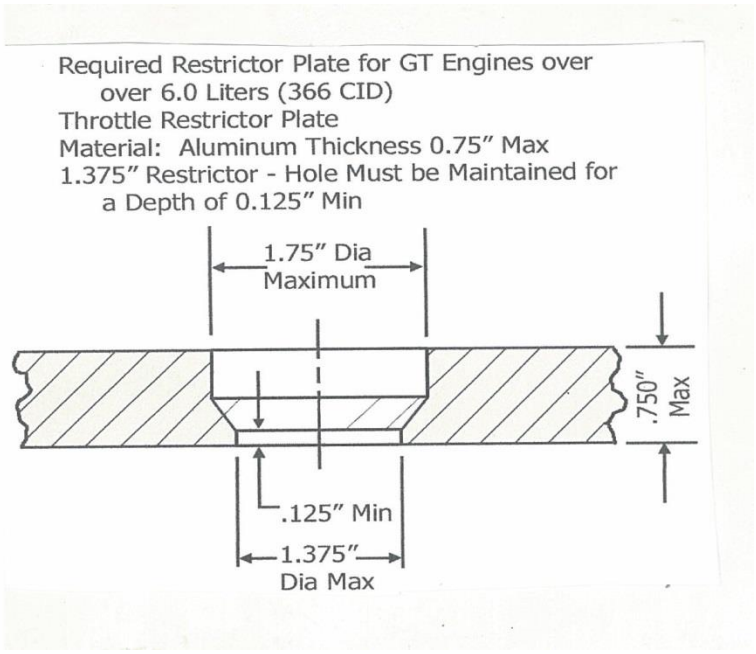

6.1.2 Weight

6.1.2.1 The weight chart, below, is applicable to all cars unless alternate weight(s) is/are specified in the GTCS.

Weight Chart for GT-1

Type	Cubic Inches	Liters	Carb	F.I.
V-6	up to 275	4.5	2430	2655
V-8	up to 311	5.1	2680	2930
V-8	311 to 335	5.1 to 5.5	2780	3040
V-8	335 to 366	5.5 to 6.0	2880	3150
V-8	over 366*	6.0*	3180	3480

* With restrictor to 1-3/8 inch throttle bores per restrictor plate diagram.
Weight in pounds with driver.

6.1.2.2 All cars using a production based transmission having no more than four (4) forward speeds and a working reverse speed may reduce the listed weight by fifty (50) pounds.

6.1.2.2.1 **Note**: A production based manual transmission is defined as a unit that retains original type gears (i.e., not straight cut, dog ring type gears). It shall be located in the same basic position as in the production automobile, retaining the standard bellhousing dimensions, and may use any shift linkage.

6.1.2.3 All cars competing on ten (10) inch wide rims may reduce the listed weight by fifty (50) pounds.

6.1.3 Approved Automobile List (GT-1)

Make/Model	Wheelbase
American Motors Corporation	
Concord	108.0"
Javelin	109.0"
Spirit	96.0"
Ford Motor Company – Ford	
Mustang 1965-1968	108.6"
Mustang 1969-1970	108.0"
Mustang 1979-1993	100.5"
Mustang 1994 *	100.5"
Roof height 46.5" min (measured from the ground). *** Note 1**	
Mustang 99-	100.5"
Probe V-6; V-8	99.0"
Thunderbird 1983-1989	104.0"
Thunderbird 1990-	105.0"
General Motors Corporation – Oldsmobile	
Aurora 2Dr.	106.0"
Cutlass Ciera 1987-	105.0"
Cutlass 1988-	104.0"
Toronado 1987- *	105.0"
* **Note 1**	
General Motors Corporation – Pontiac	
Fiero	94.0"
3300, 4cyl, multi carb, weight = 1830 lbs 3100cc, V6, weight = 1830 lbs	
Fiero	94.0"
4500cc, Chevrolet 90° V-6: **Note 2**	
Mazda	
RX-7	95.2"
RX-7	95.7"
12A engine, multi carb, or fuel injection, weight = 1780lbs	
RX-7	95.7"
13B engine, multi carb, or fuel injection, weight =1830lbs	
RX-7	
20B engine, weight = 2100 lbs	
Porsche	
911 3800cc*	89.4"
*** Note 3**	

Make/Model	Wheelbase
Boxster	89.4”
Alternate engine 3.8 liter air-cooled, multi-carb or fuel injection, twin plug head, dual ignition distributor. Weight = 1880 lbs	
Shelby	
Cobra	90.0”
Chrysler Corporation	
Laser X/T	97.0”
Avenger	106.0”
Daytona	97.0”
Ford Motor Company – Lincoln/Mercury	
Capri 1979-1986	100.5”
General Motors Corporation – Buick	
Regal	108.1”
Somerset	108.1”
General Motors Corporation – Chevrolet	
Beretta	103.4”
Camaro 1967-1969	108.0”
Camaro 1970-1981	108.0”
Camaro 1982-1992 V-6 and V-8	101.0”
Camaro 1993- V-6 and V-8	102.0”
Corvette 1963-1967	98.0”
Corvette 1968-1977	98.0”
Corvette 1978-1982	98.0”
Corvette 1984-1996	96.2”
Corvette 1997 V8	104.5”
Lumina 1990-	106.0”
Monte Carlo 1995	106.0”
Monza *	97.0”
*** Note 1**	
General Motors Corporation – Pontiac	
Firebird/Trans-Am 1969-1981	108.0”
Firebird/Trans-Am 1982-1992	101.0”
Trans-Am 1993-	102.0”
Grand Prix *	106.0”
*** Note 1**	
Nissan	
300ZX/Z32 1990-	101.2”
VG30D V6 engine, (3) 48mm IDF with 40mm venturis, weight = 1930lbs. Permitted alternate hood P/N 9996-Z32HP	
Panoz GTS	
Competitors shall have a Spec manual from SCCA Enterprises in their possession at all competitions.	
Porsche	
911 Porsche Cup*	
*** Note 4**	
911 Porsche Cup 3.8 RSR *	
*** Note 5**	

Note 1: Air may be ducted to the carburetor airbox through an opening in the back of the hood, rectangular in shape, maximum width of 20”, maximum length of 3.5”. Opening may extend 1” into the windshield. Approved SCCA Pro Racing bodywork allowed.

Note 2: Weight = 2430lbs, V-6 engine may be repositioned longitudinally in the engine bay along vehicle center-line. Transverse V-6 may reduce weight by fifty (50) pounds.

Note 3: 3800cc 6, multi-carb or fuel injection, twin plug head, dual ignition distributor weight = 1880lbs. Factory spoiler p/n 930-512-023-00 & 930-512-021-00 (or kit #930-512-901-01). Entire assembly only (with rubber lip). No alternate materials, no reproductions.

Note 4: As prepared to Porsche Cup specifications. Cars must meet all MCSCC specs including fuel cell. Competitors must have in their possession a copy of the current Porsche Cup Preparation Rules. Original factory installed roll cage structures permitted.

Note 5: Porsche Cup 3.8 RSR with the following additional specifications: Wheels: (f) 18x12, r 18x 13, allow FIA GT2 front bumper cover. Allow FIA GT2 “banana” rear spoiler, transmission: 6-speed, Type g50/30, weight 2310lbs (w/driver). Original, factory-installed Matter roll cage structures permitted.

7. GT-2, 3, 4, 5 Preparation Rules

7.1 GT Cars registered as GT cars prior to January 1, 1990

All GT cars registered as GT cars prior to January 1, 1990 shall use the manufacturer's original engine location, i.e., all GT cars registered as GT cars prior to January 1, 1990 shall use the manufacturer's original engine location, i.e., front, mid, rear; drive location, i.e., McPherson strut, double A-arm, live axle-semi trailing arm, etc., unless authorized by the GTCS for a specific make and model. Front engine GT cars registered as GT cars prior to January 1, 1990 may be converted to Section ***7.2***, specifications, but shall meet ALL specifications of Section ***7.2***.

7.2 GT cars registered as GT cars after January 1, 1990

All front engine GT cars after January 1, 1990 shall utilize McPherson strut or double A-arm front suspension. A-arm front suspensions shall have the shocks attached to the outboard end of an upper or lower control arm. Rocker arms, push-pull rods, etc., are prohibited. Front wheel drive cars may convert to rear wheel drive utilizing Section ***7.4.5.14.*** Cars running in GT 3, 4, 5 that retain original front wheel drive configuration may retain the original type of rear suspension. Rear wheel drive configurations shall use a live "closed tube" rear axle. Front wheel drive cars shall use a beam rear axle unless otherwise so specified on the spec listing. Cars classified in GT2-GT5 whose original configuration was front engine, rear drive with independent rear suspension, may utilize any form of independent rear suspension at a weight increase of 100lbs. All 1990 model year and later rear and mid-engine GT cars may use the manufacturer's original type of suspension of double A-arm front and rear independent suspension as define above. All rear and mid-engine GT cars manufactured prior to the 1990 model year shall retain the manufacturer's original type of front and rear suspension. All GT cars registered as GT cars after January 1, 1990 or updated to Section ***7.2*** specifications shall utilize left side driver placement.

7.3 Safety Equipment required on all cars

7.3.1 Bulkheads

7.3.1.1 A metal bulkhead shall separate the driver/front passenger compartment from the compartment containing the fuel cell. The fuel cell, cap, filler neck, and all the fittings shall be isolated so that in case of spillage, leakage, or failure, fuel will not reach the driver. The bulkhead separating the driver/passenger compartment from the fuel cell shall not be above the bottom of the rear window and bottom of side/quarter windows. There shall be no partition extending from the bulkhead and/of floor up to the inside of the roof behind the driver/passenger compartment.

7.3.1.2 A firewall shall separate the engine compartment from the driver/passenger compartment.

7.3.2 **Fuel Cells:** Required on all cars registered after January 1, 1983 and effective January 1, 1995 required on all cars registered prior to January 1, 1983. A safety fuel cell complying with ***Appendix X***, shall be installed. All fuel cell vents shall incorporate check valves to prevent fuel spillage. Dry-break refueling couplings and discriminator valves may be installed, provided they do not extend beyond the bodywork.

7.3.3 **Roll Cage:** Required on all cars effective January 1, 1991. A roll cage complying with the ***Appendix ZZ***, shall be installed, and shall include side bars across driver's door opening.

7.3.4 Windows

7.3.4.1 A window safety net shall be installed to prevent the driver's arms and/or head from protruding through the window opening.

7.3.4.2 Windshield safety clips and rear window safety straps shall be installed on all closed cars. Three (3) clips (3 inch x 1 inch x 1/8 inch) shall be bolted or riveted to the body at the top of the windshield. Two (2) clips (3 inch x 1 inch x 1/8 inch) shall be bolted or riveted to the cowl and extend over the bottom edge of the windshield. Clips shall be spaced a minimum of twelve (12) inches apart. The rear window shall be secured with two (2) metal straps (1 inch wide x 1/8 inch thick) bolted or riveted to the body at the top and bottom of the rear window. It is recommended that three (3) one (1) inch wide strips of steel or aluminum be installed behind the windshield to support it from collapsing inward if it becomes damaged. Polycarbonate windshields may be retained using straps and/or fasteners per SCCA Pro Racing Rules.

7.3.4.3 Windshields of alternate material are permitted mounted in the stock position and being identical in size and curvature to the original glass component. Alternate windshields must be of 6mm minimum thickness. Alternate windshields shall have in addition, three (3) inner supports to prevent the windshield from collapsing inward. These supports shall be 0.75" x .125" minimum straps of aluminum spaced no closer than 6 inches apart.

7.3.4.4 **Windshield – Open Cars:** The windshield and all side and rear glass on open cars shall be completely removed, including all mounting brackets and fixtures, and a suitable windscreen installed. Said windscreen shall be made of a transparent material and shall not exceed the height or width of the original windshield/screen. The replacement windscreen shall be fitted within the vertical planes of the front most and rearmost elements of the original windshield/screen. Ducts may be installed in the rear side windows for the sole purpose of cooling the driver.

7.3.4.5 Ducts may be installed in the side window openings for the purpose of supplying cooling air to the driver and/or oil coolers.

7.3.5 **Fire Systems:** Required on all cars registered after January 1. 1993 and effective January 1, 1994 required on all cars registered prior to January 1, 1983. An on-board fire extinguishing system complying with ***Automobiles – General Regulations*** is required.

7.3.6 **Master Switch:** A master switch is required.

7.3.7 **Scatter shields:** A scatter shield or explosion-proof bell housing is required.

7.3.8 **Mirrors:** Mirrors shall provide visibility to the rear and both sides of the car.

7.3.9 Oil Catch Tanks: Oil catch tank(s) is required.

7.4 Authorized Modifications: The following modifications are authorized on all GT-2, 3, 4 and 5 cars. Modifications shall not be made unless specifically authorized herein. No permitted component/modification shall additionally perform a prohibited function.

7.4.1 General

7.4.1.1 It is not permitted to make any changes, alterations, or modifications to any component produced by the manufacturer, unless specifically authorized by these rules, or required by the GCR.

7.4.1.2 Any springs (including torsion bars) may be replaced by others of unrestricted origin, unless specifically prohibited by these rules.

7.4.1.3 Where alternate suspension and/or drive train equipment is authorized, modifications to the car/chassis are permitted to install authorized equipment, provided the modifications serve no other purpose.

7.4.1.4 Component parts of the bodywork, such as hood, doors, fenders, deck lid, rocker panels, etc., may be lightened or replaced by ones of alternate materials, provided the shape is identical to the original or approved alternate. The original rood, windshield pillars, and angle of the windshield shall be maintained. Convertible and removable top and all attaching hardware shall be removed from open cars.

7.4.1.5 Spare wheel and tire shall be removed.

7.4.1.6 Glass and/or plastic headlights, front parking lights, front signal lights, lenses, and bulbs shall be removed. Headlight openings shall be covered with a wire mesh screen or panel having the same contour as the original lens, mounted so that the headlight bezel/rim remains in place, maintaining the standard appearance of the production automobile. Side marker light assemblies shall be removed and the resulting openings covered with a plate whose dimensions do not exceed those of the original parts; side marker lights are an integral part of the taillight assembly cannot be removed. Other lighting parts and operating mechanisms may be removed. In the case of pop-up headlights, the entire assembly may be removed and the opening covered with a screen or plate (as above, without the headlights bezel/rim requirement) which provides a stock appearance. It is not permitted to relocate the standard headlights, parking lights, signal light, etc., openings, Taillights shall be in the original location and shall be the original style/type of taillight for the make, model, and year of the car. Ducts from headlights, front parking lights, and front signal lights in the front of the car may be used for ducting air to the engine, front brakes, and/or oil cooler(s). These ducts may pass through interior panels for this purpose. The cross section area of a single duct shall not exceed the cross sectional area of the original (single) headlight.

7.4.2 Chassis and Bodywork: The purpose of the following rules is to maintain recognizable external features of the manufacturer's make and model, while providing necessary safety and performance modifications. Restrictions regarding external body shape and use of belly pans is aimed at preventing attempts to obtain ground effect of streamlining. Provisions in the rules permit one off chassis and frames, to reduce the cost of building and repairing GT cars, not to permit high technology (streamlining and/or ground effects). The original roof, windshield pillars, and angle of the windshield shall be maintained. Semi-monocoque or monocoque construction is prohibited.

7.4.2.1 The external shape of the body cannot be changed, except when authorized. Standard grills, window openings, rain gutters, or approved facsimiles shall be retained. All external trim and model identification may be removed. One piece front and one piece rear bodywork is allowed. Rood and A-pillars shall be separate pieces. Rocker panels of an alternate material may be a flat, vertical panel having the same dimensions as the original component when viewed from the side. Overall width of the vehicle/rocker panel measured at the door sill must remain stock. The cowl trim panel may be modified or removed. Misalignment or modifications to create ventilation where none previously existed are prohibited.

7.4.2.2 Chassis, frame, or subframe may be lightened, reinforced, or replaced, provided components and attachments are not relocated, except where specifically permitted. Reinforcing does not authorize the use of belly pans forward of the firewall, of aft of the front edge of the rear wheel opening. No part of the bodywork or chassis, to the rear of the front wheel opening, shall touch the ground when both tires on the same side of the car are deflated. The floor behind the rear wheel opening shall be flat and follow, but not exceed, the line of the rear fender bottom. Only the fuel cell container may protrude or extend below this plane.

7.4.2.3 The firewall and/or floor may be replaced with aluminum allow or steel providing they remain in the same locations as the recognized model. Firewalls may be modified or notched for installing headers, or carburetors, or to allow engine relocation as authorized by these rules.

7.4.2.4 Bumpers may be removed providing all projecting hardware is removed except when it (they) are an integral part of the bodywork, in which case it (they) may be replaced with replica(s) of different material. Non-integral bumpers may be replaced with a replica of alternate material or removed. Bumper bracket holes in the bodywork may be covered provided such covering serves no other purpose.

7.4.2.5 The driver seat shall be replaced with a racing-type bucket seat providing lateral support for the torso. Seat mountings shall be reinforced. (See ***Automobiles – General Regulations*** Section ***9.3.13***, "Driver's Seat.") Driver's seat shall be located so that another seat of equal width dimensions could be to the passenger side of the car (no center seating). The drivers' seat shall be firmly mounted to the structure of the car. In cars where the seat back is upright, the back of the seat shall be firmly attached to the main roll hoops, or its cross bracing, so as to provide aft and lateral support. Bulkheads, firewalls, rear decks, or similar structures of suitable strength may be used as a substitute for the main roll hoop or cross bracing to provide the required seat back support. Rear seat and seatback shall be removed. The passenger seat shall be removed.

7.4.2.6 Doors may be pinned, but not bolted, to prevent their openings in case of an accident. Standard door hinges and latch mechanisms may be removed, but the doors shall be capable of being opened or removed. Interior

door panels may be removed and the door window slots may be covered. Pins or straps may be added to hood and deck lid to supplement or replace the latches. Hood and deck lid hinges may be removed.

7.4.2.7 All driver and front passenger door window glass shall be removed. Window cranks and mechanisms may be removed. Rear quarter, rear side, and rear windows may be transparent (clear) polycarbonate material, minimum thickness 1/8 inch, but shall remain in the same position in the frame or opening as the original glass it replaces; rubber molding optional. All GT cars: rear windows/hatchbacks and deck lids shall be completely closed. No bumper blocks or other means of poor alignment of bodywork will be permitted.

7.4.2.8 Fenders may be flared for tire clearance provided their shape and opening contour, in the horizontal projection, is similar and proportional to the original opening and does not obscure the vision of the tire. The tire shall not extend beyond the fender openings at the highest point of the tire. Tires and wheels shall remain completely inside the body. Ventilation openings, other than those which are standard production on the recognized model, are prohibited. The rear fender flares on GT2 cars may extend forward into the door, no more than 26 inches from the rear axle centerline (GT2 ONLY). Wheel opening location may be altered in accordance with the allowable wheelbase tolerance in order to maintain vehicles stock appearance.

7.4.2.9 Inner fender panels separating the wheel wells from the engine compartment may be altered or removed. Rear inner fender panels may be altered, replaced, or removed provided there are panels providing total separation between driver compartment and wheel wells.

7.4.2.10 Replacement, addition, or removal of accessories (gauges, switches, indicators, etc.), or other interior modifications for driver convenience, or to permit installation of required safety equipment, is authorized provided such modifications have no influence whatsoever on the mechanical performance of the car. Such modifications do not include the substitution or replacement of any bodywork or chassis component except those specifically authorized by these rules. Floor mats and all interior trim shall be removed.

7.4.2.11 A spoiler may be fitted to the front of the car. It shall not protrude beyond the overall outline of the car as viewed from above, or aft of the forward mot part of the front fender opening (cutout) and shall not be mounted more than four (4) inches above the horizontal centerline of the front wheel hubs. The spoiler shall not cover the normal grill opening at the front of the car. An intermediate mounting device may be used on cars whose front bodywork is above the four (4) inch minimum. Openings are permitted for the purpose of ducting air to the brakes, radiator, and/or oil cooler(s); equal openings may be placed in the standard lower front panel directly behind openings placed in the spoiler. When bumpers are retained, the spoiler and bumper shall appear to be two separate parts. The spoiler "pan" area forward of the leading edge of the front wheel openings shall be flat and follow, but not exceed, the line of the front fender/spoiler bottom. No components may protrude or extend below this plane except for a front splitter that may extend as follows:

GT2 front splitter may extend up to 3 inches
GT3 front splitter may extend up to 2 inches
GT4 front splitter may extend up to 2 inches

7.4.2.12 A flat plane rear spoiler, contiguous with the rear bodywork rearward of the rear window, is allowed which complies with the following:

7.4.2.12.1 **Height:** No higher than three (3) inches (four (4) inches for GT-2) measured from the bodywork along the face of the spoiler from the point of attachment to the top of the spoiler. In the case of the spoiler with a curved top edge conforming to the shape of the bodywork (rearview), the measurement is to be made perpendicular to the tangent of the body at the point of attachment. In the case of a spoiler mounted with a vertical mounting flange on the rear face of the bodywork, the measurement shall be made ignoring any slight amount of mounting flanges (see below) exposed due to the curvature of the rear bodywork at the point of attachment.

7.4.2.12.2 **Width and Overhang:** No wider than the body, excluding fender flares, from the forward most part of the spoiler (or mounting flange) rearward. Shall not extend rearwards of the rearmost extremity of the bodywork for the entire width of the car (when viewed vertically from above the car at any point, the spoiler shall not protrude beyond the body work).

7.4.2.12.3 **Mounting:** Spoilers shall be strong enough to be self supporting and mounted directly to the rear hatch, deck, or truck lid. A mounting flange no greater than one and one-half (1/1/2) inches wide, contiguous with the bodywork, (either forward facing on the top surface of the bodywork or downward facing on the rear surface of the bodywork) shall be employed. No other forward facing sheet metal supports are allowed. Supplemental bracing may be added in the form of two (2) rods (maximum diameter one-quarter inch), mounted at least ten (10) inches inboard from the ends of the spoiler. Small rear supports may be added.

7.4.2.12.4 **Configuration:** The spoiler shall be a single plane spoiler (a straight line in any vertical cross-section) uniform in height from the rear bodywork with no gaps or openings below the spoiler for its entire width. Only enough curvature (in a fore and aft direction as viewed from above) shall be permitted to facilitate mounting. The use of fences, end rails, Gurney flaps, wickerbills, or other forward facing lips or aerodynamic devices is prohibited.

7.4.2.12.5 A club specific rear wing may be fitted and shall comply as follows:

7.4.2.12.5.1 A single element, single plain airfoil scaled to a chord length of 10.75inches. A maximum 0.50 inch Gurney tab is allowed at the trailing edge of the wing element. The tab must be mounted 90 degrees to the upper wing surface. No air may pass between the tab and the wing. The wing end plates must fit within a rectangle measuring 11.00 inches long by 4.00 inches tall. No portion of the wing element or tab may extend beyond the perimeter of the end plate. The end plates must be mounted parallel

to the vehicle centerline, and must be perpendicular to the ground. Endplates must be flat, with no curvature or Gurney tabs.
GT2: The maximum width of the entire wing assembly (wing element, endplates, Gurney tab, and mounting hardware) is 68.00 inches, but no wider than the rear body width including fender flares.
GT3: The maximum width of the entire wing assembly (wing element, endplates, Gurney tab, and mounting hardware) is 64.00 inches, but no wider than the rear body width including fender flares.

7.4.2.12.6 Wing Mounting:

GT2 and GT3: The entire wing assembly must be mounted below the highest point of the roof or roll cage main hoop whichever is higher measured at the highest point.
GT2 and GT3: The trailing edge of the wing assembly must be located within an area defined by a point; 6" forward of rearmost bodywork and the rearmost bodywork measured at vehicle centerline.
Two wing mounting posts must be used, with each one located between 8"-20" inboard from end of wing. The exposed portion of the wing mounting posts shall not exceed 85 square inches each. Curved brackets will be measured as if they're in a flat plane as viewed from the side. Mounting brackets are to be included in measurement.
The maximum wing angle from horizontal is 30-degrees

7.4.2.12.7 GT4 Wing Rules

A. The maximum width of the entire single element, flat plane wing assembly is 56.0 inches, but it may be no wider than the bodywork including fender flairs. The maximum chord is 8.0 inches. Wing endplates must fit within a rectangle measuring 8.5 inches wide by 3.0 inches high. Endplates must be flat, with no curvature or Gurney tabs. A maximum 0.5-inch wicker-bill may be employed.
B. The wing shall be mounted to the trunk/deck lid with two brackets. Each mounting bracket shall attach to the wing at least 2.0 inches inboard of the endplates. The brackets may protrude through the trunk/deck lid to allow the brackets to be fastened together beneath the lid.
C. The wing shall be *mounted 6.0 inches below the highest point of the roof or roll cage main hoop whichever is higher measured at the highest point.*
D. The trailing edge of the wing assembly must be located between 6.0 inches forward of the rearmost bodywork and the rearmost bodywork as measured along the vehicle longitudinal centerline.
E. Cars with a wagon or hatch back style body must have the entire wing positioned between 6.0 and 28.0 inches of the rearmost bodywork as measured along the vehicle longitudinal centerline, and a maximum of 4.0 inches above the highest point of the roof. A wagon-back style body is a car in which the rear edge of the roofline is no more than 28.0 inches forward of the rearmost bodywork as measured along the vehicle longitudinal centerline.

7.4.3 Suspension and Wheels

7.4.3.1 Wheelbase may be changed from -3" to +1" from printed stock dimensions in a fore/aft direction.
7.4.3.2 Suspension components may be reinforced, modified, or replaced as long as the type of suspension is not changed from that authorized in this GTCS.
7.4.3.3 Suspension mounting points, including suspension springs, may be relocated.
7.4.3.4 Suspension springs may be replaced with others of unrestricted origin.
7.4.3.5 Modifications or substitution of hubs, bearings, spindles, axle shafts, universal B joints, flex joints, and CV joints are permitted.
7.4.3.6 Addition or substitution of anti-roll bars, camber compensating devices, and/or suspension stabilizers is permitted. If these devices extend into the driver/passenger compartment, they shall be completely sealed off by metal panels.
7.4.3.7 Suspension bushings and joints may be replaced by others of different material and/or design. Offset bushings and spherical bearings are permitted, including adjustable type.
7.4.3.8 Steering arms, pitman arms, and steering linkage component parts may be modified, reinforced, or substituted. The steering system may be changed and/or relocated.
7.4.3.9 The steering wheel may be replaced and rake of the steering column may be altered. A collapsible type of steering column equivalent to Federal Motor Vehicle Safety Standard No. 204 is required in all cars registered after January 1, 1983 and highly recommended for prior registered cars. GT cars registered after January 1, 1990 or GT cars converted to Section ***7.2***, specifications shall have left side driver placement.
7.4.3.10 Substitute wheels of any type may be used provided their dimensions and the track they determine are within the limits specified in the GTCS for that model. All four (4) wheels shall be of the same diameter.
7.4.3.11 **Shock absorbers:** it is not permitted to alter the number of shock absorbers. The make of shock absorber and its points of attachment may be moved. Shock absorbers may have load-bearing capacity; e.g., gas-filled or coil-over. When using load-bearing shocks, the original springs may be removed. GT cars registered after January 1, 1990 or GT cars converted to Section ***7.2,*** specifications shall have the shock absorber attached to the outboard end of any upper or lower control arm. Rocker arms, push-pull rods, etc., are prohibited.
7.4.3.12 **Wheels:** Material is unrestricted, provided it is metal. All four (4) wheels shall be the same diameter, and the same rim size shall be used on the same axle, refer to specification pages for wheel sizes. The only authorized wheel size will be 13 x 7 for all GT4 vehicles and 13 x 6 for all GT5 vehicles, unless alternates are listed in vehicle specs. All GT4/GT5 cars listed with 15' diameter wheels if prepared as tube frame cars shall use 13" diameter wheels.

7.4.4 Electrical Systems

7.4.4.1 Standard battery may be replaced by one of different make and capacity. The battery may be relocated and shall be securely mounted and enclosed in a non-conductive protective box.

7.4.4.2 The electrical/electronic system may be modified or replaced provided an operating starter motor and two (2) brake lights are retained.

7.4.4.3 Any distributor or transistorized ignition system (including crank-triggered), firing the same number of spark plugs as the original distributor, may be used.

7.4.4.4 Magneto ignition is prohibited unless listed in the GTCS. Ignition wiring and spark plugs are unrestricted.

7.4.5 Engine and Drive Train/General

7.4.5.1 Exhaust manifold(s), header(s), tailpipe(s), and muffler(s) may be of unrestricted origin. The exhaust pipe(s) and/or muffler(s) may be recessed into the floor panel and rocker panel. The exhaust may be recessed into the bottom of the door or rear fender below a line seven (7) inches above the bottom of the rocker. There may be a maximum of two (2) such areas in the door or fender, with the maximum length for each no more than seven (7) inches. Note that the exhaust outlet shall still be mounted as low as possible; this does not authorize exhaust outlets through the door. Exhaust opening(s) shall exit to the rear of the wheelbase centerline and away from the body.

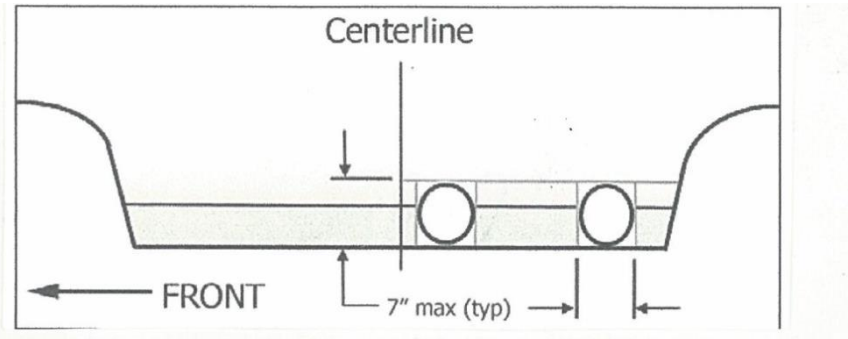

180 degree headers: The passenger's side floor plan pan may be raised not more than ten (10) inches to accommodate the installation of the exhaust system and muffler(s) provided such raising of the floor serves no other purpose. Exhaust may pass through the rear body work no higher than the rear axle centerline.

7.4.5.2 All GT Category cars shall comply with "Sound Control."

7.4.5.3 Exhaust emission control air pumps, associated lines and nozzles, and EGR devices cannot be modified in any way except that they may be completely removed. When air nozzles are removed from the cylinder head, the holes shall be completely plugged.

7.4.5.4 Substitution of modification of the clutch and/or flywheel is permitted.

7.4.5.5 It is permitted to lighten, balance, or modify in shape, by tooling, the standard or optional components of the engine and drive train, provided it is always possible to identify them as such. Material shall not be added to these components unless specifically authorized by these rules.

7.4.5.6 Alternate engine and drive train components considered replacement parts, such as seals, bearings, valve guides, pushrods, water pump, timing chain/belts and sprockets, nuts, bolts, studs, washers, and gaskets are permitted. Bushings or offset keys of unrestricted origin may be installed.

7.4.5.7 The substitution of valve spring retainers and keepers is permitted. Valve springs are unrestricted (including number) provided the type and location remain unchanged.

7.4.5.8 Generator (alternator), crankshaft, and water pump pulleys may be altered or replaced with others or unrestricted origin. Any crankshaft vibration dampener is allowed.

7.4.5.9 Any oil pan (sump), oil pump(s), and/or pick-ups are allowed. Oil pump(s) shall be driven mechanically by the engine. Dry sump systems are permitted. The oil tank shall be located within the bodywork. The oil tank, cap, and all fittings shall be isolated so that in case of spillage, leakage, or failure, oil will not reach the driver. Any oil filter(s) may be used.

7.4.5.10 Installation of any vent or breather on the engine, transmission, or differential is permitted. See ***Automobiles – General Regulations*** Section ***9.3.22***. Crankcase vacuum devices are prohibited.

7.4.5.11 Any readily available transmission having no more than five (5) forward speeds and a reverse may be use providing the location is the same as the Production automobile. Any shift linkage may be used. For front engine, rear drive cars requiring the transmission to be attached to the engine, the transmission front seal shall be within twelve (12) inches of the back of the engine block. Sequential shifting transmissions are permitted with a 50lb weight penalty. Air, hydraulic, or electric actuation of the gearshift mechanism is not allowed. On front engine/rear drive cars, the transmission front seal is the seal which is within 5" of the gear on the input shaft which meshes with the foremost gear on the counter/layshaft.

7.4.5.12 Heavy duty propeller shaft(s) and/or drive shaft(s) may be used. Steel retaining strap(s) shall be used to prevent drive shaft failure from dropping or entering driver compartment.

7.4.5.13 Any axle tube, final drive housing, gear ratio, limited slip, or locked differential may be used. Final drive units which permit ratio changes while the car is in motion are prohibited. GT cars registered after January 1, 1990

or GT cars converted to Section 7.2, specifications, using the front engine/rear drive configuration, shall use a “closed-tube” rear axle housing.

7.4.5.14 Engine and transmission mounts may be alternate shape and/or material. Cars with engines mounted longitudinal to the chassis MAY relocated the engine in a longitudinal, not lateral, direction within the following restrictions:

7.4.5.14.1 V8, V6 and V4 engines shall align the center of the foremost spark plug hole in line with the front axle spindles.

7.4.5.14.2 In-line six (6) cylinder engines shall align the center of the first spark plug hole (from the front) in line with the front axle spindles.

7.4.5.14.3 In-line four (4) cylinder engines shall align the center of the first spark plug hole (from the front) in line with the front axle spindles.

7.4.5.14.4 Rotary engines shall align the forward-most spark plug in line with front axle spindles.

7.4.5.14.5 The engines may be rotated about the crankshaft centerline (lean over) a maximum of fifteen (15) degrees unless otherwise noted and shall not cause hood bulges.

7.4.5.14.6 Transverse mounted engines may be rotated for axle/cv joint alignment. Any front mounted engine may be rotated to a longitudinal position that places the crankshaft centerline on the longitudinal centerline of the car. The engine may be rotated about the crankshaft (lean over) a maximum of fifteen (15) degrees unless otherwise noted and shall not cause hood bulges. Any available transmission having no more than five (5) forward speeds and a reverse gear may be used provided it is mounted to the rear of the engine. Only a beam (live) closed tube axle type rear drive may be used.

7.4.6 Engine, Reciprocating

7.4.6.1 Engines may be rebored a maximum of 1.2mm (0.047 inch) over the standard bore size in the GTCS. A cylinder block from any model from the same manufacturer which is of the same material and dimensionally identical throughout, except for non-critical bosses, is permitted.

7.4.6.2 Crankshaft main bearing caps may be modified or substituted. Main bearing cap straps or girdles and/or additional main bearing cap bolts may be used, provided that no material is added to the block for their attachment.

7.4.6.3 The crankshaft may be replaced with another of the same basic material, but with no change in stroke and provided the angles of the crank throws remain the same. The engine firing order shall remain unchanged.

7.4.6.4 Connecting rods may be replaced with any connecting rod of steel (ferrous) material. Aluminum, titanium, and non-metal connecting rods are prohibited, except where fitted as standard.

7.4.6.5 Any pistons and piston pins may be used.

7.4.6.6 Any camshaft(s) may be used, provided locations are (is) the same as standard.

7.4.6.7 Any cam followers may be used, except that roller cam followers shall not be used unless fitted as standard equipment.

7.4.6.8 Any rocker arms and rocker assembly supports may be used.

7.4.6.9 Valve sizes are unrestricted except when limited by the GTCS for specific automobiles. Centerlines shall not be altered. Valves may be of alternate material; non-metal is prohibited.

7.4.6.10 Compression ratio may be altered by machining, using any head gasket(s) or elimination of head gasket(s).

7.4.7 Engine, Rotary Piston

7.4.7.1 The capacity of the working chamber(s) shall not be changed.

7.4.7.2 The eccentric shaft may be replaced with another of the same basic material, but no changes in eccentricity or journal dimensions are permitted.

7.4.7.3 Rotor is unrestricted, providing the material and number of lobes remains unchanged.

7.4.7.4 Alternate rotor housings are allowed only as listed in the GTCS for specific automobiles. No changes are allowed in the epitrochoidal curve in alternate housing.

7.4.8 Cooling Systems

7.4.8.1 7Cooling fan(s) may be modified, substituted, or removed. Electrically operated cooling fan(s) may be installed, provided it (they) serve no other purpose. The use of any engine, transmission, and/or differential oil cooler(s) is (are) permitted provided it (they) are mounted completely within or under the bodywork, but not in the driver/passenger compartment. Associated oil cooler pumps and lines are permitted for the transmission and differential. Air ducts may be fitted to the oil cooler(s) as specifically authorized herein.

7.4.8.2 Any water radiator is allowed, provided there are no changes in the exterior bodywork to accommodate its use. It shall not be located in the driver/passenger compartment. Separate expansion or header tank(s) are permitted, provided they are mounted in the engine compartment. The heater core may be removed entirely but not modified or replaced.

7.4.8.3 Sealing or shrouding the airflow area between the normal grill opening and the water radiator is permitted.

7.4.8.4 On water-cooled cars, thermostats may be modified or replaced with blanking sleeves or restrictors.

7.4.8.5 Alternate fan and fan shrouds are permitted on air cooled engines.

7.4.9 Fuel Induction System: All inducted air shall pass through venture(s), maximum one per cylinder rotor.

7.4.9.1 Any air filter(s) may be used, or the filter(s) may be removed. Velocity stack(s) and/or air box(es) may be fitted. Air may be ducted to the carburetor(s) provided the ducting is contained within the engine compartment and air is supplied through normal openings in the bodywork (or as specifically authorized herein).

7.4.9.2 Any fuel pump(s) may be used and location(s) may be changed. Fuel pump(s) shall not be located in the driver/passenger compartment.

7.4.9.3 All fuel/oil lines passing through the driver/passenger compartment shall be steel or metal braided hose. Number of fuel lines unrestricted.

7.4.9.4 **Carburetors:**

7.4.9.4.1 **Reciprocating Engines**: Carburetor(s) and intake manifold(s) are unrestricted except as limited in the GTCS for a specific make/model. All cars with restricted carburetion are required to use I.R. manifolds with no plenums or balance pipes unless otherwise restricted for specific automobiles. Intake manifold(s) shall be attached to the head(s) without modification to the head(s).

7.4.9.4.2 **Rotary Engines**: Carburetor and intake manifold are unrestricted except as limited in the GTCS for a specific make/model. All cars with restricted carburetion are required to us I.R. manifolds with no plenums or balance pipes. Intake manifold(s) shall be attached to the end cover(s) or rotor housing(s) without modification to the end cover(s) or rotor housing(s).

7.4.9.4.3 No portion of the intake manifold(s) may extend into the intake ports (reciprocating and rotary engines.)

7.4.9.4.4 Carburetors shall incorporate a butterfly-type throttle plate for engine speed control.

7.4.9.4.5 Where Weber or Weber-type carburetors are specified and used, they shall retain their standard configuration of fuel distribution. This is to prohibit annular discharge carburetors.

7.4.9.4.6 Where Weber carburetors are specified, Weber-type carburetors may be substituted. The following are approved Weber-type carburetors: Weber, Solex, SK, Mikuni, and Delorto.

7.4.9.4.7 Fuel injection is permitted on engines that originally utilize fuel injection. Both method and manufacture are open. Only butterfly type throttle plates may be used and all air shall pass through the throttle plates. Maximum number of throttle plates per cylinder or rotor is one (1). The maximum number of injectors per cylinder is one (1). Rotary engines may use two (2) injectors per rotor.

7.4.9.5 Supercharging/Turbo charging are prohibited.

7.4.9.6 Float(s) shall not be removed or altered to produce (a) float less carburetor(s).

7.4.9.7 Any throttle linkage may be used.

7.4.9.8 Induction systems shall be equipped with a positive method of throttle closing by means of (an) external spring(s).

7.4.10 Brakes

7.4.10.1 Any dual master cylinders and/or pressure equalizing/regulating device(s) are permitted.

7.4.10.2 Servo-assist systems are unrestricted.

7.4.10.3 Backing plates/dirt shields may be ventilated or removed. Brake air ducts may be fitted within the provisions of these rules.

7.4.10.4 The hand brake may be removed.

7.4.10.5 Brake lines shall be steel or metal braided hose. They may be relocated and may be given additional protection.

7.4.10.6 Brake rotors, calipers, and/or drums are unrestricted except as limited by the GTCS for a specific make/model. Brake rotors/drums shall be located in the original position (e.g., inboard vs. outboard). Carbon brake rotors are prohibited.

7.4.10.7 Water-cooled brakes are permitted, maximum reservoir capacity – two (2) gallons, maximum line size 3/16 in I.D. The water shall be atomized by an atomizing nozzle, and the water shall enter the air duct a minimum of twelve (12) inches from the centerline of the spindle/axle.

8. GT-2 Specifications

ACURA

Allowed Bodies				Allowed Engines					
	years	driveline	wheelbase	eng fam	disp. (cc)	style	fuel	SIR	weight
NSX		RWD	99.6		1997	DOHC	auto sidedraft		1830
NSX	2017	AWD	103.5	K20A	1998	DOHC	unrestricted		1830
RSX		FWD	101.2		2157	DOHC	auto sidedraft		1830
					2971	DOHC	auto sidedraft		2140
					3176	DOHC	auto type unrestricted		2190
					3210	SOHC			2280
					3471	SOHC			2280

ALFA ROMEO

Allowed Bodies				Allowed Engines					
	years	driveline	wheelbase	eng fam	disp. (cc)	style	fuel	SIR	weight
GTV		RWD	94.5		2492	SOHC	unrestricted		1900
					2959	SOHC	unrestricted		2040

AUDI

Allowed Bodies				Allowed Engines					
	years	driveline	wheelbase	eng fam	disp. (cc)	style	fuel	SIR	weight
TT Coupe		FWD	97.3		1984	DOHC	unrestricted		1730

BMC & ROVER GRP

Allowed Bodies				Allowed Engines					
	years	driveline	wheelbase	eng fam	disp. (cc)	style	fuel	SIR	weight
MGB GT		RWD	91.0		3528	OHV			2280
TR8		RWD	85.0						

BMW

Allowed Bodies				Allowed Engines					
	years	driveline	wheelbase	eng fam	disp. (cc)	style	fuel	SIR	weight
Series 1 E82	08-12	RWD	104.7	S14	2302	DOHC	auto type unrestricted		1950

325	84-91	RWD	101.2	M20	2494	SOHC	auto type unrestricted	1950
M3 E30	88-91	RWD	101.2	M50	2494	DOHC	auto type unrestricted	2140
M3 E36	95-99	RWD	106.3	M52B28	2793	DOHC	auto type unrestricted	2140
M3 E46	00-	RWD	106.3	M52B30	2996	DOHC	auto type unrestricted	2140
330ci E46	01-	RWD	107.3	S50	2990	DOHC	auto type unrestricted	2140
				S50B32	3201	DOHC		2280
				S52	3152	DOHC		2280
				S54	3246	DOHC		2280

CHEVROLET

Allowed Bodies				Allowed Engines					
	years	**driveline**	**wheelbase**	**eng fam**	**disp. (cc)**	**style**	**fuel**	**SIR**	**weight**
Cavalier		RWD	104.0		2210	DOHC			1830
Monza	75-80	RWD	97.0		2272	DOHC			1950
				Eco-Tec	2349	DOHC			1950
					2392	DOHC			1950
					2679	OHV	auto type unrestricted		1900
					3136	OHV	unrestricted		2020

CHRYSLER
Corp

Allowed Bodies				Allowed Engines					
	years	**driveline**	**wheelbase**	**eng fam**	**disp. (cc)**	**style**	**fuel**	**SIR**	**weight**
Breeze/Status		FWD	108.0		1995	SOHC	auto type unrestricted		1830
Neon		FWD	104.0		1995	DOHC	auto type unrestricted		1830
Daytona/Laser	84-87	FWD	97.0		2213	SOHC	2 automotive type		1950
Viper Roadster		RWD							

FERRARI

Allowed Bodies				Allowed Engines					
	years	**driveline**	**wheelbase**	**eng fam**	**disp. (cc)**	**style**	**fuel**	**SIR**	**weight**
308 GTB	76-	RWD	92.1		2926	DOHC	auto type unrestricted		2140
288, 328, 348, 355		RWD	96.5		2980	DOHC			2280

FORD

Allowed Bodies				Allowed Engines					
	years	**driveline**	**wheelbase**	**eng fam**	**disp. (cc)**	**style**	**fuel**	**SIR**	**weight**
Capri I, II		RWD	100.8		1993	SOHC	2 automotive type		1830
Mustang	74-78	RWD	100.8		2496	DOHC	auto type unrestricted		2105
Mustang	79-93	RWD	100.5		2550	OHV	auto type unrestricted		2040
Mustang	10-11	RWD	101.0/107.1		24796	OHV	auto type unrestricted		2040
Probe		FWD	99.0/102.9		2934	OHV	auto type unrestricted		2040
					3726	DOHC	auto type unrestricted		2380

INFINITI

Allowed Bodies				Allowed Engines					
	years	**driveline**	**wheelbase**	**eng fam**	**disp. (cc)**	**style**	**fuel**	**SIR**	**weight**
G20	99-02	FWD	102.4/97.5		1998	DOHC	auto type unrestricted		1830

HONDA

Allowed Bodies				Allowed Engines					
	years	**driveline**	**wheelbase**	**eng fam**	**disp. (cc)**	**style**	**fuel**	**SIR**	**weight**
Prelude	93-	RWD	100.4	K20A	1998	DOHC	unrestricted		1830
Civic Coupe	92-95	RWD	103.2	K20A2/K20A3	2157	DOHC	auto type unrestricted		2040
Civic Hatchback	92-95	RWD	101.3		2157	DOHC	auto type unrestricted		2040
CRX	88-91	RWD	90.6		2252	DOHC	auto type unrestricted		2090
S2000	00-09	RWD	94.5	K24A	2354	DOHC	unrestricted		1950

JAGUAR

Allowed Bodies				Allowed Engines					
	years	**driveline**	**wheelbase**	**eng fam**	**disp. (cc)**	**style**	**fuel**	**SIR**	**weight**
XKE									
Coupe/Roadster		RWD	96.0		3781	DOHC	auto type unrestricted		2110
					4235	DOHC	auto type unrestricted		2110

LOTUS

Allowed Bodies				Allowed Engines					
	years	**driveline**	**wheelbase**	**eng fam**	**disp. (cc)**	**style**	**fuel**	**SIR**	**weight**

ESPRIT	75-	RWD	96.0		2174	DOHC	unrestricted 2 auto type		2040

MAZDA

Allowed Bodies				Allowed Engines					
	years	driveline	wheelbase	eng fam	disp. (cc)	style	fuel	SIR	weight
Miata/MX5	90-	RWD	89.2	12A SP	2292		auto type unrestricted		1720
RX7		RWD	95.2/95.7	12A BP/PP	2292		auto type unrestricted		1810
RX8		RWD	98.0	13B SP/BP	2616		auto type unrestricted		1810
				13B PP	2616		auto type unrestricted		1900
				Renesis SP	2616		auto type unrestricted		1810
					2967		auto type unrestricted		2090
				20B SP/BP/PP	3924		auto type unrestricted		2280
				MZR/L5-VE	2488		unrestricted		1950

MERCEDES BENZ

Allowed Bodies				Allowed Engines					
	years	driveline	wheelbase	eng fam	disp. (cc)	style	fuel	SIR	weight
190E	85-92	RWD	104.9		2599	SOHC	auto type unrestricted		2060

MERCURY

Allowed Bodies				Allowed Engines					
	years	driveline	wheelbase	eng fam	disp. (cc)	style	fuel	SIR	weight
Capri	79-86	RWD	100.8		2796	OHV	auto type unrestricted		2040
					2934	OHV	auto type unrestricted		2040

NISSAN

Allowed Bodies				Allowed Engines					
	years	driveline	wheelbase	eng fam	disp. (cc)	style	fuel	SIR	weight
Nissan GT-R	09-	RWD		SR20DE/VE	1998	DOHC	auto type unrestricted		1830
240Z/260Z/280Z	-78	RWD	90.7	L24	2380	SOHC	auto type unrestricted		1950
280ZX 2+2		RWD	102.6	KA24E	2389	SOHC	unrestricted		1920
280ZX 2+2	79-	RWD	91.3	KA24DE	2389	DOHC	auto type unrestricted		1950
240SX		RWD	97.5	QR25DE/DD	2489	DOHC			2080

240SX S13		RWD	97.5	VG25	2495	DOHC		2130
240SX S14		RWD	99.4	L26	2565	SOHC	auto type unrestricted	1950
300ZX Z31	-89	RWD	91.3	VG30	2754	SOHC	auto type unrestricted	1950
300ZX Z32	90-	RWD	96.5/101.2	L28	2760	SOHC	auto type unrestricted	1950
350Z/370Z		RWD	many	L28	2899	SOHC	auto type unrestricted	2040
				VG30	2960	DOHC	auto sidedraft 40 choke	2140
				VG30	2988	DOHC	auto type unrestricted	2200
				VQ35 w/VQ30 crank	3150.3	DOHC		2280
				VQ30 w/VQ35 crank	3317.7	DOHC		2280
				VG33	3275	SOHC		2230
				VG33	3275	SOHC	40mm choke	2090
				VG33E	3275	DOHC		2280
				VQ35	3498	DOHC		2280

PONTIAC

Allowed Bodies

Allowed Engines

	years	driveline	wheelbase	eng fam	disp. (cc)	style	fuel	SIR	weight
Fiero		RWD	93.4		2198	DOHC			1830
Grand Am		FWD	103.4	LE5 EcoTech	2210	DOHC			1830
Sunfire GT		FWD	104.0		2272	DOHC	auto type unrestricted		1950
				ECOTEC	2349	DOHC			1950
					2392	DOHC			1950
					2471	OHV	auto type unrestricted		1810
					2679	OHV	auto type unrestricted		1900
					2837	OHV	auto type unrestricted		2080
					3136	OHV	auto type unrestricted		2150
					3350	OHV	auto type unrestricted		2090
					3498	OHV	auto type unrestricted		2140
					3564	DOHC	direct inj not permitted		2280

PORSCHE

Allowed Bodies	years	driveline	wheelbase	Allowed Engines eng fam	disp. (cc)	style	fuel	SIR	weight
911 Coupe/Targa	68-	RWD	89.4		1991	SOHC	unrestricted 2 auto type		1900
914-6		RWD	96.5		2195	SOHC	unrestricted 2 auto type		1900
944		RWD	94.5		2341	SOHC	unrestricted 2 auto type		1900
968		RWD	94.5		2478	SOHC	auto type unrestricted		1950
Boxster		RWD	95.1		2480	DOHC	auto type unrestricted		1950
					2681	SOHC			2020
					2687	DOHC			2180
					2766	SOHC			2180
					2808	SOHC	unrestricted 2 auto type		1900
					2981	DOHC	auto type unrestricted		2040
					2992	SOHC	unrestricted 2 auto type		1950

SUNBEAM

Allowed Bodies	years	driveline	wheelbase	Allowed Engines eng fam	disp. (cc)	style	fuel	SIR	weight
Tiger		RWD	86.0		4265	OHV			2280
					4728	OHV			2280

TOYOTA

Allowed Bodies	years	driveline	wheelbase	Allowed Engines eng fam	disp. (cc)	style	fuel	SIR	weight
Celica	82-89	RWD	99.4	3S	1998	DOHC	auto type sidedraft		1830
Celica	90-05	FWD	93.7/99.4	5S	2164	DOHC	auto type sidedraft		1830
MR2	86-89	RWD	91.3	2RZ	2438	DOHC			2080
MR2	91-95	RWD	94.5	5M	2759	DOHC	auto type unrestricted		2040
Solara	00-	FWD	107.1-97.0	1MZ	2995	DOHC			2140
Supra		RWD	94.5	2GR	3594	DOHC	6 ind TB 40 mm choke		2280

VOLKSWAGEN

Allowed Bodies				Allowed Engines					
	years	driveline	wheelbase	eng fam	disp. (cc)	style	fuel	SIR	weight
Corrado		FWD	97.3		1984	DOHC	unrestricted 2 auto type		1860
GOLF/GTI		FWD	97.3		2782	DOHC	unrestricted 2 auto type		2140

9. GT-3 Specifications

ACURA

Allowed Bodies				Allowed Engines					
	years	**driveline**	**wheelbase**	**eng fam**	**disp. (cc)**	**style**	**fuel**	**SIR**	**weight**
Integra	-93	FWD	96.5	D16A	1590	SOHC	unrestricted		1690
Integra	*94	FWD	101.2	B16A	1595	DOHC	unrestricted		1690
RSX	02/05/09	FWD	96.5/101.2	B18C	1797	DOHC	unrestricted		1860
				B18B	1834	DOHC	unrestricted		1860
				F20C	1997	DOHC		32mm	2060
				K20A	1998	DOHC		32mm	2060
				K24	234	DOHC		32mm	2195

ALFA ROMEO

Allowed Bodies				Allowed Engines					
	years	**driveline**	**wheelbase**	**eng fam**	**disp. (cc)**	**style**	**fuel**	**SIR**	**weight**
GTV 1750/2000		RWD	92.5		1779		unrestricted		1860
Sport Sedan		RWD	98.8		1962		unrestricted		1960
4C		RWD	93.7		1742			33mm	2325

AMC

Allowed Bodies				Allowed Engines					
	years	**driveline**	**wheelbase**	**eng fam**	**disp. (cc)**	**style**	**fuel**	**SIR**	**weight**
Gremlin	-78	RWD	96.0		2537	OHV	Holley 5210 2V		2455
Spirit	-79	RWD	96.0		3805	OHV	Holley 500 cfm 2V		2680

AUDI

Allowed Bodies				Allowed Engines					
	years	**driveline**	**wheelbase**	**eng fam**	**disp. (cc)**	**style**	**fuel**	**SIR**	**weight**
TT Coupe		FWD	95.6/97.3		1984	SOHC	unrestricted		1960
					1984	DOHC		32mm	2060

BMW

Allowed Bodies **Allowed Engines**

	years	driveline	wheelbase	eng fam	disp. (cc)	style	fuel	SIR	weight
2002 all		RWD	100.5/98.5		1767	SOHC	unrestricted		1860
318 Coupe E36	-92	RWD	106.0		1796	DOHC	unrestricted		1860
318i E30	83-91	RWD	101.2		1895	DOHC		32mm	2060
318i/320i E21	77-82	RWD	100.9		1991	SOHC	unrestricted		1960
E46		RWD	100.9/106.0		2302	DOHC		32mm	2195
Z3		RWD	96.3						

CHEVROLET

Allowed Bodies **Allowed Engines**

	years	driveline	wheelbase	eng fam	disp. (cc)	style	fuel	SIR	weight
Cavalier		RWD	101.2		1998	SOHC	unrestricted		1960
Corvair/Yenko		RWD	108.0		1998	DOHC		32mm	2060
Vega		RWD	97.0		2287	SOHC	unrestricted		2060
					2689	OHV	2 Weber IDT/A 4 Roch 1V		2290

CHRYSLER Corp

Allowed Bodies **Allowed Engines**

	years	driveline	wheelbase	eng fam	disp. (cc)	style	fuel	SIR	weight
Neon		FWD	104.0		1997	SOHC	unrestricted		1960
Daytona/Laser	84-88	FWD	97.0		1997	DOHC		32mm	2060
Daytona/ Laser	-89	FWD	97.3		2213	SOHC	unrestricted		2060
Horizon		FWD	96.7						
Omni 024/Charger	79-82	FWD	96.6						
Shadow		FWD	97.0						

FIAT

Allowed Bodies **Allowed Engines**

	years	driveline	wheelbase	eng fam	disp. (cc)	style	fuel	SIR	weight
131 Coupe/Sedan		RWD	98.0		1995	DOHC	unrestricted		1960
Brava		RWD	98.0						

FORD

Allowed Bodies				Allowed Engines					
	years	driveline	wheelbase	eng fam	disp. (cc)	style	fuel	SIR	weight
Capri		RWD	100.8		1993	SOHC	unrestricted		1960
Mustang II	74-78	RWD	96.2		1998	SOHC	unrestricted		1960
Mustang II	79-93	RWD	100.4		2189	SOHC	`	31mm	2130
Mustang II	94-98	RWD	101.2		2260	DOHC		32mm	2195
Mustang II	10-11	RWD	101.0/107.1		2301	SOHC	unrestricted		2130
Pinto		RWD	94.0						
Probe		FWD	99.0/102.9						

HONDA

Allowed Bodies				Allowed Engines					
	years	driveline	wheelbase	eng fam	disp. (cc)	style	fuel	SIR	weight
Civic	88-91	FWD	90.6	EW	1488	SOHC	unrestricted		1690
Civic Coupe	92-95	FWD	98.4	D15B	1493	SOHC	unrestricted		1690
Civic Coupe	2017-	FWD	106.3	D16A	1590	SOHC	unrestricted		1690
Civic Si	06-10	FWD	104.3-106.3	B16A	1595	DOHC	unrestricted		1690
CRX	84-87	FWD	86.6	B18C	1797	DOHC	unrestricted		1860
CRX	88-91	FWD	90.6	B18B	1834	DOHC	unrestricted		1860
CRZ	10-14	FWD	95.9	F20C	1997	DOHC		32mm	2060
Insight	00-06	FWD	94.5	K20A	1998	DOHC		32mm	2060
S2000	00-09	RWD	94.5	K20C1	1928	DOHC		33mm	2350
				K24	2354	DOHC		32mm	2195

` MAZDA

Allowed Bodies				Allowed Engines					
	years	driveline	wheelbase	eng fam	disp. (cc)	style	fuel	SIR	weight
323	85-89	FWD	94.6	86D	1597	DOHC	unrestricted		1690
626	83-87	FWD	98.8	BP	1839	DOHC	unrestricted		1860
MX3		FWD	96.3		1998	SOHC	unrestricted		1960
Miata/MX5	-05	RWD	89.2/91.0	MZR	1999	DOHC		31mm	2060
MX5	06-10	RWD	91.7		2189	SOHC	unrestricted		2060
MX5 Miata	2016-	RWD	91.0	MZR	2260	DOHC		31mm	2195
MX5 Miata RF	2017-	RWD	91.0	MZR/L5-VE	2488	DOHC		31mm	2195

MX6	-88	FWD	99.0/102.8	12A SP	2292		unrestricted		1960
RX2		RWD	97.3	12A BP	2292		40 MM CHOKE		1960
RX3		RWD	91.0	12A PP	2292			37mm	2150
RX7		RWD	95.3/95.7	12A PP	2292		ex GT2	37mm	2300
RX7		RWD	95.2/95.7	13B SP	2616		unrestricted		2080
RX8		RWD	98.0	13B BP	2616		42mm choke		2200
Protégé		FWD	98.4	13B PP	2616			37mm	2200
				Renesis SP	2616		unrestricted		2130
				Renesis BP	2616		44mm choke		2250
				Renesis PP	2616			37mm	2250
				13B BP	2616		44mm choke ex GT2		2350
				13B PP	2616		ex GT2	37mm	2350

` MERCURY

Allowed Bodies				Allowed Engines					
	years	**driveline**	**wheelbase**	**eng fam**	**disp. (cc)**	**style**	**fuel**	**SIR**	**weight**
Capri	79-86	RWD	100.4		1993	SOHC	unrestricted		1960
Cougar	99-02	FWD	103.0-106.4		2301	SOHC	unrestricted		2130

` MITSUBISHI/EAGLE

Allowed Bodies				Allowed Engines					
	years	**driveline**	**wheelbase**	**eng fam**	**disp. (cc)**	**style**	**fuel**	**SIR**	**weight**
Eclipse		FWD	97.3	4G93	1834	DOHC	unrestricted		1860
Lancer	00-07	FWD	102.4		1997	SOHC	unrestricted		1960
Lancer	2017	FWD	102.4		1997	DOHC		32mm	2060
Talon		FWD	97.3		2213	SOHC	unrestricted		2060
				4G69	2378	SOHC		32mm	2195

` NISSAN

Allowed Bodies				Allowed Engines					
	years	**driveline**	**wheelbase**	**eng fam**	**disp. (cc)**	**style**	**fuel**	**SIR**	**weight**
200SX S10	77-79	RWD	92.1	L18	1770	SOHC	unrestricted		1860
200SX S11	80-83	RWD	94.5	L20	1952	SOHC	unrestricted		1855

200SX S12	84-88	RWD	95.5	L20 Z22 block	2045	SOHC	unrestricted		1960
200SX SER	95-97	RWD	95.7/99.8	L20 Z22 block	2188	SOHC	unrestricted		2010
240SX S13		RWD	97.5		1974	SOHC	unrestricted		1960
240SX S14		RWD	99.4	QR25DE/DD	1988	DOHC		32mm	2060
240Z/260Z/280Z		RWD	90.7	SR16VE	1596	DOHC	unrestricted		1690
280ZX	79-83	RWD	91.3	SR20DE/VE	1998	DOHC		32mm	2060
300ZX		RWD	91.3-101.2	NAPZ	2188	SOHC	unrestricted		1960
350Z/370Z		RWD	many	L24	2380	SOHC	unrestricted		2060
710		RWD	98.4	KA24E	2389	SOHC		32mm	2195
610		RWD		KA24DE	2389	DOHC		32mm	2195
510		RWD	95.3	QR25DE/DD	2489	DOHC		32mm	2195
Sentra SER Spec V		FWD	95.7	L26	2565	SOHC		33mm	2130
				L28	2760	SOHC		33mm	2130
				L28	2760	SOHC	ex GT2	33mm	2280
				VG30	2960	SOHC		33mm	2270

` PONTIAC

Allowed Bodies				Allowed Engines					
	years	**driveline**	**wheelbase**	**eng fam**	**disp. (cc)**	**style**	**fuel**	**SIR**	**weight**
Fiero		RWD	93.4		2677	OHV		33mm	2270
Firebird	82-92	RWD	101.0		2198	DOHC		32mm	2280
Sunfire		FWD	104.0	LE5 EcoTech	2210	DOHC		32mm	2280
					2349	DOHC		32mm	2345

` PORSCHE

Allowed Bodies				Allowed Engines					
	years	**driveline**	**wheelbase**	**eng fam**	**disp. (cc)**	**style**	**fuel**	**SIR**	**weight**
911 Coupe/Targa	-68	RWD	87.0/89.4		1968	OHV	unrestricted		1960
914		RWD	96.5		1984	SOHC	unrestricted		1960
924		RWD	94.5		1991	SOHC	unrestricted		1960
944		RWD	94.5		2195	SOHC	unrestricted		2060
Boxster		RWD	96.5		2341	SOHC	unrestricted		2130
					2478	SOHC		33mm	2270
					2681	SOHC		33mm	2270

					2687	SOHC		33mm	2270
					2766	SOHC		33mm	2270
					2808	SOHC		33mm	2270
					2992	SOHC		33mm	2270

` SAAB

Allowed Bodies				Allowed Engines					
	years	**driveline**	**wheelbase**	**eng fam**	**disp. (cc)**	**style**	**fuel**	**SIR**	**weight**
900	-79	FWD	99.4		1698	OHV	unrestricted		1805
99E/CM/EMS/GL/L									
E		RWD	97.4		1854	SOHC	unrestricted		1960
Sonnett III		FWD	84.6		1985	SOHC	unrestricted		1960
					1985	DOHC		32mm	2060

` SCION

Allowed Bodies				Allowed Engines					
	years	**driveline**	**wheelbase**	**eng fam**	**disp. (cc)**	**style**	**fuel**	**SIR**	**weight**
TC	-5	FWD	93.7	any class legal Toyota engine					

` TOYOTA

Allowed Bodies				Allowed Engines					
	years	**driveline**	**wheelbase**	**eng fam**	**disp. (cc)**	**style**	**fuel**	**SIR**	**weight**
Celica	94-99	FWD	99.4	4AG	1587	DOHC	unrestricted		1690
Celica	00-05	FWD	102.4/93.7	4AG	1762	DOHC	unrestricted		1860
Celica									
GT/ST/Cpe/LB		FWD	98.3	7AFE	1762	DOHC	unrestricted		1860
Corolla		FWD	93.7/102.4		1770	OHV	unrestricted		1860
MR2	-89	RWD	91.3	1ZZ	1794	DOHC	unrestricted		1860
MR2	00-05	RWD	91.3	2ZZ	1796	DOHC	unrestricted		1860
Paseo	92-99	FWD	93.7	3S	1998	SOHC	unrestricted		1960
Tercel	-91	FWD	95.3/93.7	5S	2164	DOHC		32mm	2130
				20R	2189	SOHC	unrestricted		2060
				2AZ	2362	DOHC		32mm	2195
				2RZ	2438	DOHC		32mm	2195

` TRIUMPH

Allowed Bodies				Allowed Engines					
	years	**driveline**	**wheelbase**	**eng fam**	**disp. (cc)**	**style**	**fuel**	**SIR**	**weight**
GT6 all	-74	RWD	83.0		1998	OHV	unrestricted		1855
TR250/TR6		RWD	88.0		2498	OHV	unrestricted		2130

` VOLKSWAGEN

Allowed Bodies				Allowed Engines					
	years	**driveline**	**wheelbase**	**eng fam**	**disp. (cc)**	**style**	**fuel**	**SIR**	**weight**
Beetle	98-01	FWD	98.9		1715	SOHC	unrestricted		1755
Corrado		FWD	97.3		1780	SOHC	unrestricted		1860
Golf/GTI		FWD	97.3/98.9		1780	DOHC	unrestricted		1860
Jetta		FWD	97.3	05B/06A/06B	1780	DOHC	unrestricted		1860
Rabbit	75-84	FWD	94.5		1984	SOHC	unrestricted		1960
Scirocco		FWD	94.5		1984	DOHC		32mm	2060

` VOLVO

Allowed Bodies				Allowed Engines					
	years	**driveline**	**wheelbase**	**eng fam**	**disp. (cc)**	**style**	**fuel**	**SIR**	**weight**
122S		RWD	102.5		1986	OHV	unrestricted		1855
142/142E		RWD	102.5	B20	2127	SOHC	unrestricted		2060
242/244DL		RWD	104.0	B21	2320	SOHC	unrestricted		2130
S40		FWD	100.4	B1234	2320	DOHC		32mm	2130
1800E/S/ES		RWD	96.5						

10. GT-4 Specifications

Year	Manufacturer	Model	Disp.	Weight (lbs)	PCS
	Alfa Romeo	GTV	1570cc	1980	Y
84-	AMC/Renault	Alliance/Encore	1397cc	1850	Y
	BMW	1600-2/1602	1573cc	2030	Y
	Dodge	Colt Coupe	1597cc	1980	Y
78-	Dodge	Omni/024	1715cc	2080	Y
	Fiat	124 Special	1438-1592cc	2030	Y
	Fiat	124 Sport Coupe	1438cc	1930	Y
	Fiat	124 Sport Coupe	1592cc	2230	Y
	Fiat	124 Sport Coupe	1608cc	2050	Y
	Fiat	124 Sport Coupe	1756cc	2030	Y
	Fiat	131 Coupe/Sedan	1756cc	2130	Y
64-68	Ford	Cortina GT	1499-1598cc	1930	Y
91-93	Ford	Escort	1598cc	2030	Y
81-90	Ford/Mercury	Escort/Lynx	1598cc	2030	Y
82-	Ford/Mercury	EXP/LN 7	1598cc	2030	Y
78-80	Ford	Fiesta	1598cc	2030	Y
	Ford	Pinto	1598cc	2030	Y
84-87	Honda	Civic CRX	1342cc	1780	Y
84-87	Honda	Civic CRX	1488cc	1900	Y
88-91	Honda	Civic CRX	1488cc	1900	Y
	Honda	Civic CVCC	1488cc	1930	Y
80-83	Honda	Civic	1335cc	1780	Y
84-87	Honda	Civic (4-door)	1488cc	1980	Y
93-95	Honda	Civic Coupe	1488cc	1980	Y
96-	Honda	Civic Coupe	1488cc	1980	Y
84	Honda	Civic HB	1342cc	1780	Y
84-87	Honda	Civic HB	1488cc	1980	Y
64-66	Lotus	Cortina TC	1558cc	2030	Y
67	Lotus	Cortina TC	1558cc	2030	Y
	Mazda	323	1597cc	1980	Y
81-	Mazda	GLC	1490cc	1830	Y
92-94	Mazda	MX3	1490cc	1830	Y
	Mazda	Protégé	1490cc	1830	Y
99-	Mazda	Protégé	1490cc	1830	Y
79-82	Nissan/Datsun	210	1397cc	1780	Y
79-82	Nissan/Datsun	210	1488cc	1800	Y
74-78	Nissan/Datsun	B210	1397cc	1780	Y
79-	Nissan/Datsun	B310	1397cc	1780	Y
68-73	Nissan/Datsun	PL510	1595cc	2030	Y
95-97	Nissan/Datsun	200 SX SE-R	1397cc	1780	Y
95-97	Nissan/Datsun	200 SX SE-R	1597cc	2030	Y
95-97	Nissan/Datsun	200 SX SE-R (RWD only)	1595cc	2030	Y
83-86	Nissan/Datsun	Pulsar/KN12	1488cc	1980	Y
83-86	Nissan/Datsun	Pulsar/KN12	1597cc	2030	Y
87-90	Nissan/Datsun	Pulsar/KN13	1597cc	2030	Y
82-85	Nissan/Datsun	Sentra/B11	1488cc	1930	Y
82-85	Nissan/Datsun	Sentra/B11	1597cc	2030	Y
86-90	Nissan/Datsun	Sentra/B12	1597cc	2030	Y
91-94	Nissan/Datsun	Sentra/B13	1397cc	1780	Y
91-94	Nissan/Datsun	Sentra/B13	1488cc	1930	Y
91-94	Nissan/Datsun	Sentra/B13	1597cc	2030	Y
91-94	Nissan/Datsun	Sentra/B13 (RWD only)	1595cc	2030	Y
	Opel	1900 MK 51, 53, 57R	1897cc	2040	Y
	Opel	GT MK 77	1897cc	2040	Y
	Opel/Isuzu	Sport Coupe	1897cc	2180	Y
79-	Renault	LeCar	1397cc	1850	Y
-64	SAAB	Sedan	1696cc	2130	Y
-64	SAAB	Sonett/Sonett III	1496-1696cc	1880	Y
89-	Suzuki	Swift GT/Gti	1299cc	1830	Y

80-83	Toyota	Corolla	1588cc	1950	Y
84-	Toyota	Corolla	1587cc	1980	Y
84-87	Toyota	Corolla Sport 8V	1587cc	1980	Y
76-79	Toyota	Corolla Sport Coupe/LB	1588cc	1950	Y
-75	Toyota	Corolla SR-5	1588cc	1950	Y
	Toyota	Paseo	1587cc	1980	Y
	Toyota	Paseo	1588cc	1950	Y
84-	Toyota	Starlet	1580cc	1800	Y
80-	Toyota	Tercel	1452cc	1930	Y
91-	Toyota	Tercel	1587cc	1980	Y
91-	Toyota	Tercel	1588cc	1950	Y
67-79	Volkswagen	1500/1600	1493-1584cc	1880	Y
70-77	Volkswagen	1600	1584cc	1880	Y
98-99	Volkswagen	Beetle	1471-1588cc	1980	Y
	Volkswagen	Corrado	1471-1588cc	1980	Y
	Volkswagen	Golf	1471-1588cc	1980	Y
75-	Volkswagen	Rabbit	1471-1588cc	1980	Y
75-	Volkswagen	Scirocco	1471-1588cc	1980	Y

11. GT-5 Specifications

Year	Manufacturer	Model	Disp.	Weight (lbs)	PCS
	Alfa Romeo	Giulia	1290-1357cc	1740	Y
	Alfa Romeo	GT-1300, GTA, Alfetta	1130-1297cc	1740	Y
	Alfa Romeo	GT-1300, GTA, Alfetta	1357cc	1830	Y
	AMC/Renault	Alliance/Encore	1296cc	1800	Y
	AMC/Renault	Alliance/Encore	1397cc	1900	Y
	Austin/MBC	America (FWD)	1275cc	1650	Y
	Austin/BMC	America (RWD)	1275cc	1700	Y
	Austin/BMC	Mini Cooper	1275cc	1650	Y
	Austin/BMC	Mini Cooper	850cc	1100	Y
	Austin/BMC	Mini Cooper	970-988cc	1300	Y
	Austin/BMC	Mini Cooper	1071-1098cc	1400	Y
	Austin/BMC	Mini Cooper (RWD)		1700	Y
	Fiat	128	1290cc	1730	Y
	Fiat	128	1116cc	1490	Y
	Fiat	128 Sport Coupe	1290cc	1730	Y
	Ford	Anglia Super	1198-1297cc	1680	Y
	Ford	Escort Super	1297cc	1830	Y
73-79	Honda	Civic	1237cc	1710	Y
73-79	Honda	Civic	1170cc	1620	Y
80-83	Honda	Civic	1335cc	1860	Y
84-87	Honda	Civic	1342cc	2000	Y
88-91	Honda	Civic HB	1342cc	2000	Y
92-95	Honda	Coupe	1237cc	1710	Y
84-87	Honda	CRX	1342cc	2000	Y
88-91	Honda	CRX	1342cc	2000	Y
73-79	Mazda	GLC	1272cc	1820	Y
92-94	Mazda	MX3	1296cc	1780	Y
	Mazda	Protégé	1296cc	1780	Y
99-	Mazda	Protégé	1296cc	1780	Y
95-97	Nissan/Datsun	200SX SE-R B14	1171cc	1680	Y
95-97	Nissan/Datsun	200SX SE-R B14	1237cc	1780	Y
95-97	Nissan/Datsun	200SX SE-R B14	1288cc	1860	Y
91-94	Nissan/Datsun	Sentra B13 (RWD Only)	1171cc	1680	Y
91-94	Nissan/Datsun	Sentra B13 (RWD Only)	1237cc	1780	Y
91-94	Nissan/Datsun	Sentra B13 (RWD Only)	1288cc	1860	Y
79-	Nissan/Datsun	210	1171cc	1680	Y
79-	Nissan/Datsun	210	1237cc	1780	Y
79-	Nissan/Datsun	210	1288cc	1860	Y
70-73	Nissan/Datsun	B110 Coupe/Sedan	1171cc	1680	Y

70-73	Nissan/Datsun	B110 Coupe/Sedan	1237cc	1780	Y
70-73	Nissan/Datsun	B110 Coupe/Sedan	1288cc	1860	Y
74-78	Nissan/Datsun	B210	1171cc	1680	Y
74-78	Nissan/Datsun	B210	1237cc	1780	Y
74-78	Nissan/Datsun	B210	1288cc	1860	Y
78	Renault	R5	1289cc	1800	Y
	Subaru	GL Coupe	1267cc	1813	Y
88-94	Subaru	Justy (2 WD)	1189cc	1675	Y
	Toyota	Corolla	1166cc	1746	Y
81-91	Toyota	Starlet	1166	1746	Y
81-	Toyota	Starlet	1290cc	1780	Y
81-91	Toyota	Tercel	1166cc	1746	Y
91-	Toyota	Tercel	1290cc	1780	Y
67	Volkswagen	1300	1285cc	1750	Y
65-66	Volkswagen	1300	1285cc	1750	Y
98-99	Volkswagen	Beetle	1285cc	1750	Y

GT-4 (Allison Legacy Cars)

1. GCR

All automobiles must comply with GCR **Automobiles – General Regulations.**

2. Purpose

GT-4 (Allison Legacy) class is intended to provide the membership with the opportunity to compete with an Allison Legacy car.

3. Intent

3.1 It is the intent of these rules to restrict modifications to those useful and necessary to construct a safe automobile for road racing. Other than those items specifically allowed by these rules, no component or part normally found on a stock example of the purchased vehicle may be disabled, altered, or removed for the purpose of obtaining any competitive advantage. The term "stock" refers to the specification of, form of, and materials of all pieces that make up the construction of a Legacy car as manufactured new by Allison Brothers Inc by authorized distributors, dealers, and retail customers. No parts with be permitted on any car that do not meet CompCar of NC specifications. No parts will be permitted on any cars that are not acceptable to CompCar of NC Officials.

4. Chassis

4.1 All Legacy car frames must be purchased from Allison Brothers Race Cars Inc. All Legacy car frames must be identified by the serial number registered with CompCar of NC. This serial number is non-transferable and must not be tampered with in any way. Chassis can not be modified in any way and must remain stock. All materials must remain original as manufactured by Allison Brothers Race Cars Inc.

4.2 **Pick-Up Points:** All pick-up points must remain in their original position as manufactured by Allison Brothers Race Cars Inc. Absolutely no modifications.

4.3 **Firewall:** Driver foot box must remain stock. Interior sheet metal may be changed in material but not appearance and can be no less than .040 aluminum.

4.4 **Bumpers:** Front and rear bumpers must remain the stock material, wall thickness, dimensions and location as delivered from the factory. No reinforcements of any kind will be permitted.

4.5 **Frame Height:** Bottom of main frame rails must maintain a minimum height of 4" from ground.

4.6 **Suspension**

4.6.1 **Rear End** – Only the Speedway Engineering midget six spline quick change rear end with 4.11 ring gears and pinion is permitted. Aluminum spools only. No lockers, ratchets, or true tracks permitted. Axles must remain stock. No alterations of lightening permitted in any form. The upper link bracket, rear end tubes, trailing arm, pan hard bar bracket, and shock mounts cannot be changed. No wheel spacers permitted on the rear end. The complete rear end assembly cannot be changed from stock specs in form or material including all rods connecting rear end to frame. The only other type of rod ends permitted other than stock will be steel or stainless steel Heim joints.

4.6.2 **Front Suspension** – Upper and lower control arms, steering arms, spindles and hubs must remain stock. No modifications or changes in form or materials including ball joints and all connecting tubes. The only other type of rod ends permitted other than stock will be steel Heim joints. One steel, ¼" thick, 6 ½" outside diameter and 2 ½" inside diameter wheel spacer is mandatory on each side. No other wheel spacers are permitted.

4.6.3 **Shocks** – Only non-adjustable stock steel SB-64 series Pro-Formance shocks will be permitted. One shock only permitted per wheel. The only adjustable device allowed on the shock is the spring adjusting nut.

4.6.4 **Springs** – Only 1 7/8" inside diameter 10" long steel coil over springs permitted. The spring must be mounted in coil over form over the shock.

4.7 **Track Width**: Total width outside to outside of either the front tires or the rear tires cannot exceed 60".

4.8 **Wheel Base**: Wheel base cannot exceed 80 1/16" on either side and can be no less than 79 ¾" on either side.

4.9 **Offset**

4.9.1 **Rear end in car** – The center of the rear end can be no more than 1/8" off of the centerline of the tail section either way (side to side).

4.9.2 **A-Frames** – Lower control arms on the front end cannot be more than 1/8" different in length from the center of the rod end to the center of the ball joint on the front leg of the control arm.

5. Brakes

5.1 **Master Cylinder** – Only one single piston steel Ford type master cylinder must be used. The only modification allowed is removal of the residual pressure valve.

5.2 **Brake Lines** – Only 3/16" diameter steel brake lines are permitted, attached at master cylinder. A flexible hose not the exceed 20" in length must be attached to front calipers. A flexible hose not to exceed 20" in length is permitted at the rear brake line T fitting. A brake line proportioning valve is permitted.

5.3 **Calipers** – Only the Outlaw model #1000/Allison Legacy 1.75" piston 3.75" mount caliper is permitted. Brake calipers must be mounted in the stock location. All brake caliper brackets must remain stock in material and form and in location. Calipers may be shimmed for pad clearance.

5.4 **Brake Pads** – All brake pads must be stock and must be approved by CompCar of NC.

5.5 **Front Brake Rotors** – Front brake rotor must be solid steel and have a 9 ¾" outside diameter. Rotors can have a maximum thickness of 3/8" and a minimum thickness of 0.300". Brake rotors cannot be modified in any form including drilling, cutting, grooving, or grinding.

5.6 **Rear Brake Rotors** – Rear brake rotors must be solid steel and remain stock. Rotors must have a 10 ½" outside diameter and 6 ¼" inside diameter. The outer surface of the brake hate must have a 6 5/8" outside diameter and a 2 5/8" inside diameter.

Rotors can have a maximum thickness of 3/8" and a minimum thickness of 0.300". The distance from the outer surface of the brake hat to the center of the rotor must be 2 ½". Rear brake rotor assembly cannot be modified in any form including drilling, cutting, grooving, or grinding.

5.7 **Brake Duct** – Only one brake duct hose allowed per each wheel, all duct hoses must be securely fastened in place on both ends. No manufactured, fabricated or any type of ducts allowed on opposite end of any hose from inlet. Duct hoses cannot exceed 3" in diameter.

6. Steering

6.1 **Steering Box** – the Allison Legacy rack & pinion spec steering box is the only steering box permitted. The steering rack must remain stock and in the stock location.

6.2 **Tie Rods and Rod Ends** – Tie rods cannot be changed in material or mounting form. The only other type of tie rod ends permitted other than stock will be steel or stainless steel Heim joints.

6.3 **Steering Shaft** – Steering shaft must remain stock between rack and firewall. Steering shaft may be raised, lowered, shortened, or lengthened from firewall back, but not changed in material.

6.4 **Quick Coupler & Steering Wheel** – Steering coupler and wheel must be approved by CompCar of NC, Inc.

7. Engine

All engine parts and accessories, internal and external, must remain stock and in stock location. The only engine permitted for any CompCar of NC/Allison Legacy event; including practice, qualifying, and races is the stock Mazda B2200, 2.2 liter, piston, overhead cam engine. The engine must have the fully visible engine serial number. The engine serial number must be registered with CompCar of NC or Allison Brothers Race Cars, Inc before any event. The engine and engine parts must remain sealed in the CompCar of NC designated seal areas in the stock manner with stock seals. Engine seals cannot be altered or tampered with in any way. **ANY VIOLATION OF ANY ENGINE RULE WILL RESULT IN A ONE YEAR SUSPENSION FOR THE CAR OWNER AND THE DRIVER. THE COMPLETE ENGINE WILL BE CONFISCATED AND WILL BECOME THE PROPERTY OF COMPCAR OF NC.** Absolutely no parts on the engine including the clutch, flywheel, pressure plate, and transmission assembly can be replaced with any aftermarket racing type (fabricated, custom, or otherwise) parts at any time. Engine mounts must remain stock.

7.1 **Carburetor**: Only the Weber 32 36 16 5L DGV5A carburetor is permitted. The carburetor, all parts of the carburetor, and the adapter plate must remain stock and in the stock location. The air jets and main fuel jets may be changed, but must be stock jets. No other changes or modifications are permitted on the carburetor. CompCar of NC reserves with right to require any competitor to change their adapter plate at any time.

7.2 **Air Cleaner**: Only the Weber Part #9921 7331 air cleaner is permitted. The air cleaner base, element, and top must remain stock and must remain in stock location. Absolutely no ducts, hoses or other devices directed to or attached to air cleaner will be permitted.

7.3 **Engine Exhaust System**: All parts of header and exhaust pipe must remain stock and in the stock location. Engine exhaust system may be painted, coated, or wrapped with a high temperature coating.

7.4 **Engine Cooling System**: All parts of the engine cooling system must remain stock and in the stock location. Only the designated Allison Legacy aluminum radiator is permitted. Radiator overflow hose is permitted. Radiator hold down must remain stock. A box-type duct is permitted from the nose piece to the radiator. The duct can be no larger than the radiator itself where against the radiator and no wider than the outward bumper supports at the nose piece. The only items that can be ducted through this box are the radiator, oil cooler (optional), or front brakes.

7.4.1 **Oil Cooler** – (optional): An engine cooler is permitted, but must be approved by CompCar of NC, Inc.

7.4.2 **Fan** – (optional): Only one (1) twelve volt electric fan is permitted. The fan must be securely fastened to the radiator core. No other fans will be permitted on car.

7.5 **Clutch**: Clutch, pressure plate, and flywheel must remain stock and are considered parts of the engine. Clutch master cylinder, lines, and slave cylinder must remain stock and in stock location.

7.6 **Transmission**: Only the stock Mazda B2200 5 speed transmission is permitted. The transmission and all parts of the transmission must remain stock and in the stock location. The only part in, on, or attached to the transmission that may be altered is the shift lever. All five forward gears & reverse must be operational at all times.

7.7 **Drive Shaft**: Drive shaft must remain stock and in the stock location. Absolutely no aluminum drive shafts permitted.

7.8 **Engine Electrical System**: All engine electrical components must remain stock, in the stock location and must operate in stock manner at all times. **ABSOLUTELY NO IGNITION OR ENGINE ELECTRICAL COMPONENT ENHANCING DEVICES ARE PERMITTED.**

8. Fuel System

8.1 **Fuel Cell Types** – A Fuelsafe fuel cell with bladder and aluminum can of a Fuelsafe standard fuel cell is the only type of fuel cell permitted. These fuel cells are manufactured for the Allison Legacy car and no part of cell can be altered in any way. Fuel cell location and fastening items must remain stock.

8.2 **Fuel Line** – Automotive or Aircraft grade fuel line no larger than 5/16" inside diameter must be used. Any canister type fuel filter can be used. No glass filters permitted. Pickup and return line between fuel cell and fuel pump must pass through steel fuel line tube, which must be in stock location.

8.3 **Fuel Type** – Only automotive gasoline is allowed. Absolutely no additives of any kind can be added to gasoline at any time. Regular unleaded 87 octane is recommended for best performance. **ANY VIOLATION OF ANY FUEL RULE WILL RESULT IN A ONE YEAR SUSPENSION FOR THE CAR OWNER AND THE DRIVER.**

9. Wheels & Tires

9.1 **Wheels** – Only 13” diameter by 7” wide double centered steel Broad Wheels with 3 ½” offset and one standard valve stem are permitted. Wheels must remain stock and cannot be altered or tampered with in any way.

9.2 **Tires** – Only Goodyear D2330-22.0 x 7 tires with the Allison Legacy logo stamped in the designated area may be approved for any CompCar of NC sanctioned Allison Legacy event including practice, qualifying, and races. Once approved, all tires must meet the following specifications.

9.3 **Durometer Reading** – All tires must meet the minimum durometer reading specified by CompCar of NC officials on the official durometer used at the time of inspection.

9.4 Tires may be inspected in any way and at any time by CompCar of NC officials regardless of durometer reading. TIRES CANNOT BE SOAKED, CHEMICALIZED, TREATED, SOFTENED, OR TAMPERED WITH IN ANY MANNER.

10. Car Weight

All cars weighed for CompCar of NC Allison Legacy events will be weighed on the official CompCar of NC sales used at the time of inspection. Weight specifications with the driver will be as follows:

10.1 **Total Car Weight**: Minimum weight – 1675 lbs

11. Car Bodies

11.1 **Body & Body Panels**: Only Allison Legacy Thunderbird or Monte Carlo fiberglass body parts are permitted. Body and all body parts must remain stock. Panels may not be interchanged between body styles and must be attached at stock seams using pop rivets with a minimum diameter of 3/16”. No body fillers of any type or form are allowed on the exterior of the body unless used for repair over a damaged area.

11.2 **Body Attachment to Frame**: Body must be securely attached to frame with pop rivets with a minimum diameter of 3/16”. Body must be attached to rocker panels on both sides through the flanges on bottom of body sides. Nose piece must be attached to front bumper and tail piece must be attached to rear bumper. Front windshield must be attached to lower window bed using 3/16” pop rivets. Body must be attached in all places in permanent form. Absolutely no dzus fasteners, cam locks, or mechanical release type devices are allowed in attaching the body or body panels together or to any part of car or frame. Hood and trunk lid must be fastened with four 3/8” diameter hood pins, each using steel clips to secure. Hood and trunk lid must fit firmly on to front and rear windows, with no gaps, openings, or holes. Body mounts must remain stock.

11.3 **Grilles and Grill Openings**: All grilles and grill openings must meet CompCar of NC specifications and must be acceptable to CompCar or NC officials.

11.4 Body Measurements

11.4.1 **Roof Height** – (10” back from top of front windshield seam in center of roof) 42 ¾” plus or minus ½” from ground.

11.4.2 **Nose Height** – 2 ½” minimum from ground to bottom of front end.

11.4.3 **Quarter Panel Height** – (measured at seam, left side) 29 ½” plus or minus ½” off ground.

11.4.4 **Bottom of Tail Piece** – (measured at left side corner) 11 ½” plus or minus ½” off ground.

11.4.5 Spoiler Dimensions

11.4.5.1 Spoiler size must be 3 ½” tall and 48” wide. Minimum thickness .080. Material must be aluminum only.

11.4.5.2 Spoiler base must follow contour of deck and quarter panels. Absolutely no braces forward or backward of any type are permitted on spoiler.

11.5 Body Modifications Permitted

11.5.1 **Door Flap** – The left side drivers door may be cut no longer than 24” from rear seam and 3 ½” down from top door flange. It must be hinged the full length of the bottom seam. The top door flange must be fastened to the window net so that the door flap is held firmly in place when window net is fastened.

11.5.2 Duct Openings

11.5.2.1 A maximum of one opening on each side of front nose piece, no larger than a manufactured single duct for a hose with a maximum diameter of 3” is permitted. The only items that can be ducted through the nose piece are the front brakes or an oil cooler.

11.5.2.2 A maximum of one opening on each side quarter panel window, no larger than a standard manufactured NACA type duct for a hose with a maximum diameter of 3” is permitted. Note: No duct hose can exceed 3” in diameter.

11.6 Windows

11.6.1 Front, rear, and quarter panel windows must be Lexan with a minimum of .093 thickness.

11.6.2 Front, rear, and quarter panel windows must remain stock and attached in stock location with 3/16” pop rivets at all times.

11.6.3 **Window Braces** – Cars must have a minimum of 3 braces for front window and a minimum of 2 braces for rear window. Braces must be a minimum of 1” x ¼” .063 aluminum.

11.6.4 **Tinting** – The only tinting allowed on any window is the front windshield top, full width x 5” down from the top of windshield. Decals cannot exceed this same area.

12. Equipment and General Accessories

12.1 **Fasteners**: All fasteners on car must meet CompCar of NC specifications.

12.2 **Fire System**: A fire extinguisher inside the car is mandatory. It must be a minimum 2 ½” pound system and be charged and operational at all times. The fire extinguisher must be located inside the cockpit within reach of driver, inside the main frame rails of car. One nozzle mandatory inside cockpit. Additional lines and nozzles may be used on fire extinguisher system.

12.3 **Bar Padding**: Roll bars must be padded and in the areas acceptable to CompCar of NC.

12.4 **Mirror**: Any rear view mirror approved by CompCar of NC can be used. It must be mounted securely inside cockpit. No mirrors or parts of mirrors can extend past the outer body surface.

12.5 Gauges: Gauges and gauge panel must remain stock.

12.6 Switches/Wiring: Only one ignition switch and one starter button per car is allowed. Complete wiring harness must remain stock. An operational on-off battery switch is mandatory and must be mounted in the stock location. And on-off switch is permitted on the dash area for the radiator fan.

12.7 Battery: Battery must be a Group 26 12Volt automotive top post battery. Battery must remain in the designated battery location in the stock form. Battery hold down must be 1" x 1" x 1/8" thick steel angle fastened with a minimum of two 5/16" diameter steel rods and nuts.

12.8 Seat Belts: Refer to ***Automobiles – General Regulations***

12.9 Seat: Only an approved high back aluminum racing seat with a minimum thickness of .120 is permitted. Seat must have a full cover. Seat must be attached to frame with a minimum of four steel bolts that have a minimum diameter of 3/8".

12.10 Window Net: An approved full window net is mandatory. Minimum size is 16" x 16". The net must be securely fastened to the top left side door bar with a steel rod that has a minimum diameter of 3/8". It must have a quick release latch on top. The latch must be securely fastened during practice, qualifying, all Allison/Legacy CompCar of NC racing events, and any time the car is on a race track and in motion.

12.11 Pedals: All pedals must be bolted in stock locations. Gas pedal must remain stock from the bottom hold in the mounting bracket upward, including the throttle cable and assembly. Brake and/or clutch pedal may be altered in form but not changed in material.

12.12 Heat Shield: A heat shield may be affixed to the right side driver foot box and sheet metal area. The heat shield must be fastened securely and should not interfere with the operation of any part of the gas pedal.

GT-5 (Legend Cars)

1. GCR
All automobiles must comply with GCR ***Automobiles – General Regulations.***

2. Purpose
GT-5 (Legend Cars) class is intended to provide the membership with the opportunity to compete with a 600 Racing's Legend car.

3. Intent
The intent of these rules is to restrict modifications to those useful and necessary to construct a safe automobile for road racing. Other than those items specifically allowed by these rules, no component or part normally found on a stock example of the purchased vehicle may be disabled, altered or removed for the purpose of obtaining competitive advantage**.**

4. Safety Requirements
All legend cars shall have at least a five-point racing harness, with the construction and mounting meeting the requirements in ***Automobiles – General Regulations***. All Legend cars shall meet the minimum safety required by 600 Racing Inc. rules.

5. Preparation Rules/Modifications

5.1 Legend cars shall meet all the rules set forth by the national rulebook of 600 Racing, Inc; except for the rules/modifications stated within for the MCSCC GT-5 class and stated within the Legend car specification. For 600 Racing national rulebook see http://www.600racing.com or contact:

600 Racing, Inc.
5245 NC Hwy. 49 South
Harrisburg, NC 28025
1-704-455-3896
Web: www.600racing.com

5.2 Each Legend car shall carry identification numbers, class letters (GT-5) and other marks required by the Supplementary Regulations. Marking shall meet the Automobiles – General Regulations (Identification Marks) section.

5.3 Legend Car Specifications: Legend cars minimum weight with driver and driving gear after qualifying and after the race is 1300 lbs. when using the 205/13R60 BF Goodrich Comp TA HR4 per 600 Racing. Another MCSCC approved tire is the Goodyear Eagle 21 x 7.5 – 13" part no. D1076 and the minimum weight with driver and driving gear after qualifying/race is 1300 lbs. when using a legal sealed 600 Racing Inc. motor. When using the Goodyear tire, the tire and wheel assemble min. weight rule does not apply.

GT-5 (Baby Grand Cars)

1. GCR
All automobiles must comply with GCR ***Automobiles – General Regulations***.

2. Purpose
GT-5 (Baby Grand) class is intended to provide the membership with the opportunity to compete with a Baby Grand car.

3. Intent
It is the intent of these rules to restrict modifications to those useful and necessary to construct a safe automobile for road racing. Other than those items specifically allowed by these rules, no component or part normally found on a stock example of the purchased vehicle may be disabled, altered, or removed for the purpose of obtaining a competitive advantage.

4. Safety Requirements
All Baby Grand cars shall have at least a five-point racing harness, with the construction and mounting meeting the requirements in ***Automobiles – General Regulations.*** All Baby Grand cars shall have a fire extinguisher or a fire system meeting ***Automobiles – General Regulations.*** All Baby Grand cars shall meet the minimum safety required by MMRA Baby Grand rules.

5. Preparation Rules/Modifications

5.1 Baby Grand cars shall meet all the rules set forth by the national rulebook of Miniature Motorsports Racing Association (MMRA) except for the rules/modifications stated within for the MCSCC GT-5 class and stated within the Baby Grand car specification. For MMRA rulebook go to http://www.mmraracing.com/Forms/2005%20Road%20Racing%20Rulebook.pdf

or contact: Miniature Motorsports Racing Association
4542 Eisenhower Ave.
Alexandria, VA 22304
1-703-751-5588
Web: www.mmraracing.com

5.2 Each Baby Grand car shall carry identification numbers, class letters (GT-5) and other marks required by the Supplementary Regulations. Marking shall meet the Automobiles – General Regulations (Identification Marks) section.

5.3 Baby Grand Car Specifications: Baby Grand cars minimum weight with driver and driving gear after qualifying and after the race is 1500 lbs.

GTSC (GT - Stock Car)

1. GCR

All automobiles must comply with GCR: ***Automobiles – General Regulations***.

2. Purpose

GTSC class is intended to provide the membership with the opportunity to compete with a NASCAR style car or truck in a championship series.

3. Intent

Provide a class for members to competitively race cars and trucks that were raced in or built to the specifications of NASCAR (Cup, BGN/Nationwide, or Truck series), Automobile Racing Club of America (ARCA), USAR (Hooters) ProCup, or United State Auto Club (USAC) stock car series. This class is intended for full-size, full steel bodied stock cars and race trucks using push-rod V8 and V6 power plants. This class is not for Daytona Dash or other compact car race series or (super) late model race cars.

4. Safety Requirements

All GTSC cars shall have at least a five-point racing harness, with the construction and mounting meeting the requirements in ***Automobiles – General Regulations***. All GTSC cars shall have a fire extinguisher or a fire system meeting ***Automobiles – General Regulations***.

5. Preparation Rules/Modifications

5.1 Each GTSC car shall carry identification numbers, class letters (GTSC) and other marks required by the Supplementary Regulations. Marking shall meet the ***Automobiles – General Regulations*** (Identification Marks) section.

5.2 Car type must be legal for one of the series listed above; including dimensions, body style, body material (all steel, except for front and rear), etc.

5.3 Minimum weight is 3,400 lbs (BGN cars with V6 engines have a minimum weight of 3,150 lbs.)

5.4 Car specifications are the same as required by the sanctioning body for the year of the car. Owner/Driver is encouraged to have possession of a sanctioning body rule book for applicable year.

5.5 Front shall be Double A-Frame with coil spring inset of the frame. Shocks to be mounted outside of the A-Frame.

5.6 Steering shall be reciprocating ball style; rack and pinion are prohibited with the exception of cars being built to the ARCA specification between 1984-1990. Driver/Owner of this type of car should be prepared to present documentation establishing his/her car as such.

5.7 Rear suspension shall be a solid rear axle with truck arms (Ford 9" or quick change) and Panhard bar. Independent rear suspension and Watts-type linkage prohibited.

5.8 Transmissions are to be 4-speed manual with reverse. Dog-type transmissions permitted.

5.9 V8 engines are to be 358 cubic inch maximum. Manufacturer brand is to be what was legal for the year of the car. Dry sump systems are highly recommended. Compression limited to 12:1. This rule supersedes original series rules, i.e. a car that originally competed at 9:1 may now compete at 12:1.

5.10 V6 engine (BGN) 272 cubic inch maximum. Manufacturer brand is to be what was legal for the year of the car. Dry sump systems are highly recommended. Compression limited to 12:1. This rule supersedes original series rules, i.e. a car that originally competed at 9:1 may now compete at 12:1.

5.11 Carburetor shall be of the Holly 4150 series with a maximum cfm of 830. Fuel injection is not permitted.

5.12 Valve train may be modified from the NASCAR and ARCA specification. Solid or hydraulic lifters, roller, or flat tappet style. Titanium valves permitted.

5.13 Brakes are required to be four wheel disc with magnetic steel or case iron rotors. Carbon fiber rotors are prohibited. Steel or aluminum calipers are allowed with titanium calipers prohibited. Dual master cylinders are required.

5.14 Wheels are to be 15" in diameter steel wheels with a width of 9.5" or as allowed in the sanctioning rule book for the applicable year.

5.15 Prohibited items are: Carbon fiber clutches, carbon fiber brake rotors, aluminum or carbon fiber drive shafts, ceramic wheel bearings and fiberglass body components other than the front and rear.

5.16 Safety Equipment: Any supplemental safety equipment required by the appropriate sanctioning bodies rule book for the year of the car such as rood and cowl spoilers, front suspension tethers, hood and spoiler tethers, etc. are expected to be functional and in effective working order. All safety equipment and requirements must meet or exceed the minimum requirements for the Midwestern Council GT-1 class.

GTP

1. General

All Cars Must comply with "Automobiles General".

This class is intended to be a class for high powered fully prepared race cars that are built beyond the scope of all other run groups as well as cars of past or current professional series that fit in no other recognized run class.

1.1 All safety equipment shall conform to that required in the GT class rules. Roll cages must be compliant to the GT class rules with regards to design and material specs.

1.2 All cars must run with full fendered body work and that body work may be a replica of a street going car.

1.3 Turbocharging and supercharging is allowed but gaseous combustion modifiers are prohibited (nitrous oxide)

Formula Categories

Formula A and C

1. General

1.1 A single seat, four open-wheeled racing car with firewall, floor, and safety equipment conforming to the requirements under ***Automobiles – General Regulations.***

1.2 Cars must be equipped with on-board self starter controlled by the driver in normal driving position.

1.3 The driver's seat must be capable of being entered without the removal or manipulation of any part or panel.

1.4 Cars shall be equipped with a dual braking system operated by a single control. In case of failure or leak at any point in system, effective braking power shall be maintained on at least two wheels.

1.5 Power may not be applied to more than two wheels.

1.6 The following aerodynamic restrictions will apply: Coachwork: All external parts of the car which are in the air stream and situated above a plane passing through the center of the wheel hubs, with the exception of units definitely associated with the functioning of the engine, transmission or roll bar.

1.6.1 No part of the coachwork, with the exception of the safety roll bar/roll cage and the engine air box, shall exceed in height a horizontal plane, 90cm, (35.4") above the lowest point of the entirely sprung structure of the car.

1.6.2 Behind t front wheels, the coachwork shall not exceed a maximum width of 130cm, (51.18") with the exception of lateral fuel tanks which cannot protrude beyond a vertical plane passing through the centerline of the tires. The maximum width of any aerodynamic device situated behind the front wheels, including the rear wing shall not exceed 110cm (43.307").

1.6.3 The coachwork ahead of the front wheels may be extended to an overall maximum width of 150cm, (59.055") provided it does not extend beyond the outside of the front tires.

1.6.4 Any part of the coachwork ahead of the front wheels exceeding an overall width of 110cm, (43.307") shall not extend above the height of the front wheel rims.

1.6.5 Any specific part of the car which has an aerodynamic influence on the stability of the vehicle must be mounted on the entirely spring part of the car and shall be firmly fixed while the car is in motion. Aerodynamic devices, including wings and plates may not extend to the rear more than one meter (39.4") from the center line of the rear wheels. No aerodynamic devices (e.g., skirts, body slides, etc.) may extend below the lower surface anywhere on the car to the rear of the front wheels.

1.6.6 Neither the safety roll bar nor any of the units associated with the functioning of the engine or transmission shall have an aerodynamic effect by creating a vertical thrust.

1.6.7 The leading edge of any airfoil fixed to the front of the car shall not be sharp (minimum radius: .6inch).

1.7 Class designation letter shall be an F followed by the class letter, on both sides of the car.

1.8 Supercharged or turbocharged cars shall be classified according to their displacement times a factor of 1.4

1.9 Filler cap must be recessed into bodywork.

1.10 Shock absorbers and body material are free.

Formula A

Formula A is a class that combines automobiles conforming to former Formula "B", and the former water cooled Super-V (Club), Bosch (Pro), and F3 Arcobelano specification. In order to qualify as Formula A, automobiles (excluding F3 Arcobelano) must comply with the following set of rules.

1. Displacement

Schedule A: Not less than 1100cc, no greater than 1600cc. Minimum for push rod engines shall be 1300cc. Rotary engines (Wankel patent) shall be rated at twice (2X) chamber displacement.

Schedule B: Not less than 1600cc, no greater than 2900cc. Rotary engines (Wankle patent) shall be rated at twice chamber displacement. No form of supercharging is permitted.

2. Engine General

Engine shall derive from automobiles recognized as FIA in Appendix J, Group 1 (series production touring); Group 2 (touring) of Group 3 (grand touring) approved by the MCSCC and shall conform to definitions and specifications shown on the FIA Recognition Form of the homologated car. Engine for use under Schedule B shall be limited to baseline, no performance enhancement option model offered by the manufacturer; single carburetor, factory induction manifold, etc.

3. Engines Per Schedule A

Engines Per Schedule A are permitted the following modifications:

3.1 The use of any inlet manifold is permitted; four valve/cylinder engines must use carburetors; two valve/cylinder engines may use either carburetors or any form of fuel injection/management system.

3.2 The use of any exhaust manifold(s).

3.3 The use of any oil sump.

3.4 The use of any oil pump.

3.5 The use of any dry sump lubrication system.

3.6 The use of any crankshaft of the stroke specified in the homologation forms for the engine.

3.7 Main bearing caps may be reinforced or substituted.

3.8 The make and location of the ignition coil and condenser may be changed.

3.9 Any distributor and/or transistor ignition may be used provided its installation does not require any modification of the engine.
3.10 Any make of type of spark plug may be used.
3.11 The use of any starter is permitted provided it can be fitted without any modification to the engine.
3.12 Substitution of the clutch and flywheel is allowed provided there is no increase in clutch diameter. The use of dowel pins is permitted.
3.13 Any pistons and piston pins may be used.
3.14 Any camshaft(s) may be used.
3.15 Cam followers may be altered or substituted.
3.16 It is permitted to lighten, balance or modify in shape by tooling, the standard or optional components of the engine, provided it is always possible to identify them positively as such.
3.17 Engines may be rebored a maximum of 1.2mm (.047 inch) over the standard size provided the resulting increase in total displacement does not exceed 1600cc.
3.18 The use of any alternative engine components considered replacement parts such as seals, bearings, valve guides, nuts, bolts, studs, washers, and gaskets are allowed provided they are of the same type and dimension. Bushings may be added where none are fitted as standard provided they are concentric and that the centerline of the bushed part is not changed. Water and oil passages may be restricted or plugged.
3.19 Pulleys, except camshaft drive pulleys, may be altered or replaced with others of unrestricted origin.
3.20 The compression ratio may be increased by machining, using any head gasket(s) or eliminating head gasket(s).
3.21 The installation of any engine, vent, or breather is permitted.
3.22 Generator or alternator is free and optional.
3.23 The use of any rocker arms or rocker arm supports.
3.24 The use of any connecting rod of the same basic material.
3.25 Valves are free in both size and material, provided the valve centerline is not altered.
3.25.1 The use of any fuel pump(s) is permitted.
3.25.2 Valve or cam covers may be substituted, provided the replacement cover affords no additional function than that of the original stock cover.
3.25.3 Any external surface of the engine may be plated, painted or anodized.
3.25.4 Engines produced with a cam carrier as a separate and distinct piece from the cylinder head or engine block may replace that cam carrier with a cam carrier of other manufacturer, provided the replacement cam carrier affords no additional function other than the original cam carrier and provided the type and number of camshaft bearings remains the same.
3.25.5 The replacement of any jack shaft or idler shaft with another of the same basic material as the standard shaft is permitted, provided it performs no additional function over the original shaft.
3.26 Exhaust emission control air pumps and associated lines and nozzles cannot be modified in any way except that they may be completely removed. When these air nozzles are removed from a cylinder head, the holes must be completely unplugged.

4. Engines Per Schedule B

Engines Per Schedule B are permitted the following modifications:

4.1 The use of any exhaust manifold.
4.2 The use of any oil sump.
4.3 The use of any oil pump.
4.4 The use of a dry-sump lubrication system.
4.5 The use of an oil radiator
4.6 The make and location of ignition coil and condenser may be changed.
4.7 Any make or type of spark plug may be used.
4.8 The use of any starter is permissible, if it can be used without modifying the engine.
4.9 Any clutch disc may be used. The flywheel may be altered or replaced if required to fit transmission or chassis.
4.10 Balancing of rotating and reciprocating components.
4.11 The use of any “replacement’ part,)i.e., gasket, seal, bearing, valve guide, bolt, etc.) that is an exact dimensional and material duplicate of the factory part.
4.12 Pulleys may be altered or replaced if required to fit chassis or to accommodate dry-sump system.
4.13 Installation of vents or breathers.
4.14 Removal of generator/alternator.
4.15 The use of alternative fuel pumps.
4.16 Removal of emission control equipment and plugging of resultant holes.
4.17 Alternate engine mounts, providing that no modification (machining or welding) of the engine is required.
4.18 “Blueprinting” is permitted, but all parts must be within manufacturing tolerance limits.

5. Transmission

No more than five (5) forward speeds.

6. Minimum Weight

Minimum weight shall be, for cars with engines per
Schedule A:
6.1 Two valve/cylinder 1050 lbs
6.2 Four valve/cylinder 1140 lbs
As raced or qualified, with driver, unrefueled. Minimum weight for cars with engines per Schedule B, shall be calculated as follows:

$$WB = 1000 \text{ LBS} + VK (\sqrt{} (D/1.6) – 1.0) 1000$$

Where:

WB = ballasted weight
VK = Derating factor, .6
D = displacement in liters

Under no circumstances shall any car classified under Schedule B weigh less than 1000 lbs. Minimum weight shall include oil, and coolant; shall not include fuel or driver.

7. Fuel Tank Capacity

Maximum fuel tank capacity: Free.

8. Formula Enterprises

Formula Enterprises vehicles shall compete in Formula A using the current SCCA FE rules.

Formula C

Formula C is a class that combines automobiles conforming to the former Formula “C”, the air-cooled super-V and the Formula 2000 classes. In order to qualify as a Formula C, automobiles must fully comply with one of the following sets of class rules.

Formula “C” single seat, open wheel racing cars conforming to the basic Formula A and C chassis and coachwork regulations, except as modified here.

1. Engines – Displacement

1.1 Unrestricted racing engines and rotary piston engines based on the Wankel patents – displacement shall not exceed 1100cc. Note: The Wankel equivalency is equal to a valve of twice (2X) the difference between the maximum and minimum volumes of the two working chambers.

1.2 Production based, two valves per cylinder push rod overhead valve, “F” head or side valve engines – displacement shall not exceed 1300cc.

2. Minimum Weight

The minimum weight of the automobile as qualified or raced with driver shall be:
Two (2) stroke cycle engines 1180 lbs.
Four (4) stroke cycle engines 930 lbs.

3. Fuel Tank Capacity

Fuel tank capacity shall not exceed 16 gallons (U.S.).

Formula 2000

1. Definition

Single seat, open wheel racing cars as defined by these regulations. Formula 2000 is fitted with standard Ford NE Series 2 liter SOHC engine. Allowable modifications, changes, or additions are as stated herein.

1.1 Chassis: The chassis must be of tubular steel construction with no stress-bearing panels except bulkhead and under tray, curvature of the under tray must not exceed 2.54cm (1 inch). Monocoque chassis construction is prohibited. Stress bearing panels are defined as: sheet metal affixed to the frame by welding, bonding, or rivets; or bolts or screws which have centers closer than 15.24cm (6 inches). Body panels cannot be utilized as stress-bearing panels. The use of composite materials using carbon and/or Kevlar reinforcement is prohibited. No engine oil or water tubes are permitted within the cockpit. It is not permitted to construct any suspension member in the form of an airfoil or incorporate a spoiler in the construction of any suspension member.

1.2 Bodywork and Airfoils: See table of dimensions. (Airfoils are a requirement for this class.) The use of composite materials using carbon and/or Kevlar reinforcement is prohibited, except as permitted herein. Ground effects are prohibited. Curvature of the under tray, laterally or longitudinally, in the area between the rearmost point of the front tire to the foremost point of the rear tire, shall not exceed 1.00inch (2.54cm). Diffuser under trays are permitted. Cockpit: forward-facing roll bar/roll cage bracing and required padding will not be considered in the dimensions shown in the table.

1.3 Ford NE series and Pinto Engines

The Ford 2 liter single overhead camshaft “NE” series engine and the 1971-74 Pinto/Capri 2 liter single overhead camshaft engine shall conform to the following specifications. The nominal bore is 90.84mm and the nominal stroke is 76.95mm (Note: All blocks shall contain casting number HM6015BA, HM6015AA, HM6015BB, HM6015AB, HM6015DA, or HM6015AD. Dashes in the casting number are not relevant.). Production tolerances are permitted providing the total swept volume does not exceed 2000cc.

a. The rockers shall remain entirely unmodified. Alternate manufacturers may be used as long as the original materials and dimensions are the same. Camshafts must be from Ford Motor Company, or Crower part #E57553 FF2000, or any camshaft that is a replica of the original and of the same material may be used. Camshaft geometry shall be stock. An alternate optional camshaft, Elgin part number 2000FC, may be used only in the original iron head. Regrinding camshaft lobes is permitted as long as the camshaft lobe center is 112° ± 2°. Offset keys are permitted. Tuftriding or Parkerizing is permitted. Maximum valve lift at determined points by camshaft rotation will be established. The use of a low rate substitute valve spring is permitted. Load characteristics of special checking spring: twelve (12) lbs., at 1.417 inches, thirty (30) lbs., at 1.000 inches. An adjustable camshaft sprocket which retains the same number of teeth and pitch as the stock sprocket may be used.

b. A standard crankshaft shall be used or any crankshaft that is a replica of the original crankshaft and of the same material may be used. Spot machining to achieve balance is permitted. Tuftriding, Parkerizing, shot peening, shot blasting, and polishing are permitted. Minimum weight: twenty-seven point five (27.5) lbs.

c. The flywheel shall be a standard component or the approved alternate Elite-001. The minimum weight is 10.5 lbs. with ring gear. The flywheel may be machined to achieve minimum weight. Spot machining to achieve balance is permitted. Flywheel bolts are free and locating dowels are permitted. A 1600 GT starter ring may be fitted. The use of any single plate clutch is permitted provided no modification is made to the flywheel other than changing the points of attachment of the clutch to the flywheel. Carbon fiber clutches are not permitted.

d. Maximum compression ratio will be controlled as follows:

1. Minimum Cylinder Head combustion chamber volume 49cc (not including head gasket). Polishing and/or tooling of the cylinder head to achieve only the required combustion chamber volume is permitted.
2. Standard Ford gasket, Fel-Pro #8361PT, or Ferrea part number G50100 may be used. Gaskets will have a minimum thickness of 0.9mm, minimum diameter of cylinder aperture of 92mm.
3. Pistons shall not protrude above cylinder block surface at TDC.

e. It is permissible to reshape inlet and exhaust port by removal of metal within limits. Addition of material in any form is prohibited. Maximum diameter of inlet port at manifold head face 39.5mm. Maximum dimensions of exhaust port at manifold face 35.5mm x 27mm. The distance between the valve centers and the angles of the valves shall not be altered.

f. Pistons shall be standard Ford Mahle, AE Hepolite, CP,J&E or Wiseco. Pistons must be unmodified in any way except for balancing and as detailed herein.

The following combinations are permitted:

1. Mahle piston P/N 80HM6102LA with rings, pin, connecting rod (with bolts), but without bearings:Minimum permitted weight = 1332.5 grams.
2. Mahle piston P/N 85HM6102DA with rings, pin, connecting rod (with bolts), but without bearings: Minimum permitted weight = 1240 grams.
   NOTE: This piston may have either casting #90V108 or #90V118.
3. AE Hepolite piston P/N 21426, casting P/N 21426 (AE Hepolite) with rings, pin, connecting rod (with bolts), but without bearings: Minimum permitted weight = 1240 grams.
4. CP piston P/N IV 2.0 LTR with rings, pin, connecting rod (with bolts), but without bearings: Minimum permitted weight = 1240 grams. Part number and Ivey logo stamped on wrist pin bosses.
5. JE piston P/N M-6102-B200 with rings, pin, connecting rod (with bolts), but without bearings: Minimum permitted weight = 1240 grams.
6. Wiseco piston P/N WD07253 as supplied by Quicksilver with rings, pin, Crower connecting rod P/N SP 93221 (with bolts), but without bearings: Minimum permitted weight: 976 grams.”

NOTE: M-6102-B200 piston assembly is now made by JE and is visually different. I.D. Marks: M-6102-B200, Ford racing logo. All marks pin stamped on wrist pin bosses.

Rings are unrestricted provided that:

A. One oil control and two compression rings are used.

B. No modification is made to the piston for the installation of the rings.

Localized machining of the gudgeon pin bosses to achieve balance and weight by simple machining; all external surfaces, dimensions, and profiles shall remain standard with the exception of the top surface of the piston crown which may have simple machining to achieve balance, and as required in Section 9.1.1.B.3.d.

g. Valves may be of Ford manufacture or Ferrea part numbers VSOIN200 and VSOEX2000. Valves shall remain standard; no reprofiling or polishing is permitted.
The original forty-five (45) degree seat angle shall be maintained.
Maximum face diameter inlet 42.2mm.
Maximum face diameter exhaust 36.2mm.
Maximum valve stem diameter 8.4mm.

h. Full connecting rods may be standard Ford, Cosworth, Oliver, or Crower. The approved Crower part numbers are SP93230B-4 or SP93230PF-4. Standard rod length must be 5.00 inches (+.005" -.010"). Alternative Crower connecting rod part number SP93235B-4 is permitted. Its length must be 5.700 inches (+ or .005 -.010"). This rod may be used only with Wiseco piston part number WD-06526 as supplied by Quicksilver above. Any rod bolts may be used. Floating piston pins may be used. Machining is permitted to remove metal from the balancing bosses to achieve balance only. Tuftriding, Parkerizing, shot peening, shot blasting, polishing, etc., are permitted.

i. Maximum valve lift against cam angle with zero tappet clearance: (Lift measured in mm)

	Standard Camshaft				Alternate Camshaft			
	Intake		Exhaust		Intake		Exhaust	
Angle	Opening	Closing	Opening	Closing	Opening	Closing	Opening	Closing
0	10.442	10.442	10.442	10.442	11.182	11.182	10.149	10.149
5	10.36	10.36	10.36	10.36	11.102	11.092	10.07	10.071
10	10.11	10.11	10.11	10.11	10.853	10.821	9.831	9.829
15	9.69	9.69	9.69	9.69	10.423	10.363	9.426	9.415
20	9.11	9.11	9.11	9.11	9.821	9.721	8.854	8.826
25	8.37	8.37	8.37	8.37	9.069	8.916	8.117	8.073
30	7.45	7.45	7.45	7.45	8.177	7.955	7.205	7.154
35	6.38	6.38	6.38	6.38	7.131	6.85	6.132	6.071
40	5.17	5.17	5.17	5.17	5.96	5.624	4.92	4.866
45	3.86	3.86	3.86	3.86	4.702	4.313	3.611	3.6
50	2.59	2.58	2.58	2.59	3.425	3.01	2.346	2.38
55	1.5	1.47	1.47	1.5	2.242	1.851	1.325	1.406
60	0.86	0.81	0.81	0.86	1.278	0.994	0.722	0.825
65	0.65	0.56	0.56	0.65	0.642	0.509	0.488	0.604
70	0.54	0.43	0.43	0.54	0.334	0.307	0.385	0.524
75	0.46	0.33	0.33	0.8	0.215	0.208	0.303	0.461
80	0.37	0.19	0.19	0.37	0.134	0.13	0.224	0.404
85	0.26	0.08	0.08	0.26	0.064	0.063	0.146	0.343
90	0.2	0.01	0.01	0.2	0.022	0.024	0.09	0.279

j. Engines will be mounted upright, and aligned fore and aft in the chassis.

k. A single carburetor only will be used on a standard inlet manifold. The carburetor will be a Weber 32/36 DGV 26/27mm venturi, its origin being from a 1600 GT "Kent" or 2000 SOHC NE engine. The Holly 5200 32/36 or Weber 38DGES (27mm venturis) carburetor may also be used. Swaged fuel inlet fittings shall be replaced by drilling and tapping the carburetor body for a threaded fitting. The air cleaner may be removed and a trumpet fitted. Jets may be changed, both throttles may open together, cold start devices and diffused bar may be removed, internal and external antisurge pipes may be fitted, and seals on emission control carburetors may be removed. The bottom of the lower column portion of the auxiliary venturi may be machined for purposes of high speed enrichment. No other modifications are permitted. Chokes (venturi) shall remain standard and no polishing or profiling is permitted.

l. The addition of material by any means to any component is prohibited.

m. It is permitted, as a means of repair, to replace damaged valve seats and cylinder bores by replacement cast iron valve seat inserts and cast iron cylinder liners; valve guides may be replaced with cast iron or bronze, all to standard dimensions. Repairs to the cam towers to facilitate replacement of cam bearing and/or replacements of broken or cracked towers is permitted as long as the cam bearing center line is not changed and that one original cam tower is retained. Line boring of cam bearing caps is permitted.

n. Balancing of reciprocating and rotating parts is permitted only by removal of metal from locations so provided by the manufacturer.
o. Non-standard rocker covers are permitted providing they in no way improve the performance of the engine.
p. Standard valve spring retainers shall be used, and single valve springs only are permitted. Shims are permitted, and valve springs are otherwise free.
q. Exhaust system and manifold are unrestricted, within SCCA safety regulations.
r. Lubrication system is unrestricted; dry sump is permitted. Localized machining of the cylinder block is permitted to allow fitting of the oil pump.
s. Oil coolers are unrestricted.
t. Cooling system unrestricted. The radiator, if housed in or incorporating a cowl air-scoop deflector, shall comply with body regulations.
u. Fuel Pump: Unrestricted.
v. Distributors are unrestricted providing they retain the original drive and location. The distributor is defined as the component which triggers the L.T. current and distributes the H.T. current. The Ignition Timing may only be varied by vacuum and/or mechanical means. It is prohibited to use any other method or component to trigger, distribute, or time the ignition.
w. Only the standard inlet manifold shall be used.
The ports may be reshaped by the removal of metal as long as the following dimensions are maintained: maximum size at head face = 1.437" (36.5mm), maximum size at carburetor flange = 3.405" (86.5mm) x 1.595" (40.5mm). The carburetor seat face may be machined to horizontal in the fore to aft plane. The diameter of the ports may exceed the above listed dimensions if the casting bore is untouched and in its original state. The water passages in the inlet manifold may be plugged. Holes in the inlet manifold resulting from the removal of emission/vacuum lines shall be plugged.
x. Gaskets and seals are unrestricted except for the cylinder head gasket that has the requirements listed in B.15.d.2. and the intake gasket. The intake gasket thickness must not exceed 1.1mm. Intake gasket is not to be construed as a spacer.
y. Pump, fan, and generator drive pulleys are unrestricted.
z. The crankcase breather may be altered or removed, but all breathers shall discharge into a catch tank.
aa. Mechanical tachometer drives may be fitted.
bb. Generators are optional.
cc. Standard oversize and undersize bearings are permitted. This does not allow reducing the bearing surface area by reducing the width of standard bearings.
dd. The use of non-standard replacement fasteners (nuts, bolts, screws, studs, and washers) which are not connected with or which do not support the intake manifold or any moving parts of the engine is permitted.
ee. Only modifications or additions specifically covered by these regulations are permitted. All engine components not covered by these regulations shall remain completely standard and unmodified. When a system is specified to be "unrestricted" (e.g. paragraphs r and t), the restrictions of this paragraph do not apply.
ff. The use of the Fast Forward aluminum cylinder head is permitted. The following dimensions must be maintained.
Intake port maximum volume 70.0 cc.
Exhaust port maximum volume 52.0 cc.
Intake port surface to exhaust port surface 5.580 +/- 0.020 inches
Intake valve center line to (adjacent) intake valve center line 4.015 +/- 0.015 inches
Exhaust valve center line to (adjacent) exhaust valve center line 4.015 +/- 0.015 inches
The machine tool marks in the intake and exhaust ports must remain untouched for 0.750 inches from the respective gasket surfaces.
gg. Any spark plugs may be used.

1.4 Ford Zetec Engine

The Ford Zetec ZX3 engine shall conform to the following specifications and may be modified only as specifically allowed. If these specifications do not explicitly allow a modification, then it may not be done. The philosophy of the Zetec engine in FC is to allow limited engine rebuilds but no performance modifications to the engine. Blue printing, balancing, head porting, polishing, etc. are strictly prohibited and against the spirit of the Zetec formula. Where Ford part numbers are specified, normal industry part number supersession is expected and the superseding part numbers are automatically included.

a. a. The cylinder head may not be ported or polished. Machining the cylinder head is not permitted except as specified in these rules. A standard three- angle "production" valve job is required and the only allowed angles are those defined in the Ford factory manual. The intake valve seats must be 30° 45° 70° with the 45° face a minimum 1.5 mm wide. The exhaust valve seats must be 30° 45° 55° with the 45° seat 1.5 mm wide minimum. Valve seats and guides may be replaced providing that they remain in the original stock locations. The camshaft, valves, springs, and shim/bucket components must be original Ford parts and may not be modified in any way. Only original unmodified Ford parts may be used for direct replacement. The camshafts must remain as ground by Ford; no polishing is permitted. The head may not be surfaced or milled beyond the minimum thickness of 5.230" measured between the cam cover seating surface and the lower plane of the head. Only the Ford #RFYS4E6090AC or RFYS4E6090AD head is allowed. The only allowed camshafts are the Ford #L913B YSAA intake and #L913B C2B exhaust. The original, unmodified Ford camshaft and crankshaft timing pulleys must be used. Required camshaft timings are as follows:
Intake centerline 116-117 degrees ATDC
Exhaust centerline 106-107 degrees BTDC
b. Only original Ford, Sealed Power #H872cp, United Engine and Machine #SO2763, or Mahle #930169439 pistons may be used. Only original Ford or Eagle #CRS5483F3D connecting rods may be used. The crankshaft may be replaced only with a standard original Ford replacement part. The crankshaft, rod and main bearing journals may be reground or polished for

the purpose of installing oversize main or rod bearings. The big end of the connecting rod may be honed to fit .002 inch larger rod bearings. Connecting rod bearings may be replaced with unmodified bearings which are specifically designated for use in this engine. The required original crankshaft main bearing journal dimension is 2.282-2.283 inches and the required original crankshaft rod journal dimension is 1.846-1.847 inches. The corresponding main journal dimensions for oversized bearings are either 2.273-2.274 inches or 2.263-2.264 inches; the corresponding rod journal dimensions for oversized bearings are either 1.837- 1.838 inches or 1.827-1.828 inches. The crankshaft centerline to deck dimension is 8.378 inches and may not be altered. The main bearing housing bore is 2.452-2.453 inches and the rod housing bore is 1.9642-1.9650 inches. Only original Ford rod bolts with a minimum weight of 24.6 grams or ARP rod bolts with a minimum weight of 23.5 grams may be used.

c. Only original stock Ford replacement piston rings (part number 2S4Z6148AA) or Hastings Rings (part number 2M4887 Std) may be used. The ring end gaps may not be altered and must remain as manufactured. All of the rings must be installed including the complete oil scraper assembly. The piston bore may be honed solely to allow piston ring seating. The first and second compression rings must be installed in the positions designated by the manufacturer.

d. All surfaces on the head, block, rods, pistons, and crankshaft must remain as manufactured by Ford and may not be altered in any way unless specifically provided for in these rules. The original casting marks and cast surfaces must remain as-cast and also meet all of the Ford design values and tolerances as stated in the Ford factory manual or as delineated in these specifications. The block may not be decked. Only Ford Zetec ZX3 blocks with block numbers #RFYS4G6015AA, or #RFYS4G6015AD or #RFYS4G6015AE are permitted. The blocks may be sleeved however all bore tolerances must remain stock or as otherwise provided for in these rules. The required compression ratio is 9.6:1, the required standard bore is 3.3390–3.3420 inches and the required stroke is 3.461 +/-.004 inches. The maximum bore dimension of 3.3420 inch is intended to allow for cylinder wear only. It is not permitted to machine to this dimension. This measurement will be taken .250 below the block deck where the bore is untouched by the piston ring.

e. Flywheel: The minimum weight is 8.0 lbs. and any weight removal from the specified flywheel must come from the clutch plate surface. The friction and clamping force surface of the flywheel may be resurfaced. Only the Quarter Master #QM107160 flywheel may be used. It is permitted to install a new ring gear on the flywheel.

f. Any 7¼ inch single plate or double plate, non-carbon fiber clutch is allowed.

g. Any oil pan is allowed. The oil pan may not contain an oil scraper between the oil pan and the block. No device in the oil pan may be contoured to the crankshaft assembly to function as an oil scraper nor may any device be closer to the rotating crankshaft assembly than 0.500 inches.

h. Any three-stage oil pump with a maximum of two scavenge stages is allowed. The maximum scavenge rotor dimensions are 1.600 inches in diameter and 1.375 inches in length. The maximum pressure rotor dimensions are 1.600 inches in diameter and 1.025 inches in length.

i. The exhaust system manifold tubing OD must be 1.5 inches (as measured 1 inch or more from the face of the head) and the manifold tubes must be a minimum of 24 inches in length and must terminate into a single exhaust pipe through a 4 into 1 collector. The collector angles must be the standard 15 degree bend, (30 degree included angle) with an exit diameter of 2 inches. The tail pipe must be a minimum of 24 inches in length. The tail pipe includes a muffler, if present, as long as the inlet and outlet pipes of the muffler are the same diameter as the tail pipe. 4 into 2 into 1 exhaust collectors or reduced diameter venturi sections are prohibited.

j. ECU: *Either the Pectel T2 ECU or the Performance Electronics PE-3 ECU is required. Cars that use the Pectel T2 ECU must have an accessible and operable communications port for a stereo jack; cars that use the PE-3 ECU must have an accessible and operable communications port for an ethernet connection. The SCCA tune-file/map for the Pectel T2 and PE-3 on the official SCCA website is required. The PE-3 tune-file/map must be loaded with PE-3 Monitor firmware V3.04.35. Competitors may be required to cycle the master switch to kill the engine at the request of a steward on the grid before a qualifying session or race.*

k. Intake manifold and fuel injection components: The Quicksilver Race Engines (QSRE) intake air scoop, intake manifold, throttle bodies, air horns, fuel rail, injector system, pressure regulator and carbon fiber air scoop with filter are required and must be used with no modifications of any kind unless specifically provided for in these rules. (Due to the aging of the air scoops alternative means of securing the filter will be permitted which may include modifications to the debris tube and other mounting hardware. The air scoop however must have a minimum .430 inch operable air bleed at its rear most point.) The only allowed intake manifold and throttle body combination is the #0138 manifold available through QSRE. Only 19 pound fuel injectors may be used and they may not be modified in any way. Fuel injectors may be replaced only with stock Ford injector part number #0280155887 XS4U-AA or Accel injector part number ACC150819.

l. Intake restrictor must meet FPIR specifications: The QSRE #1975 intake restrictor must be used and may not be modified in any way. The restrictor internal diameter is 1.340. The restrictor is to be placed between the air scoop mounting flange and the intake manifold.

m. Engines will be mounted and aligned fore and aft in the chassis n. The addition of material by any means to any component is prohibited

o. Non-standard rocker covers are permitted providing they in no way improve the performance of the engine.

p. Oil coolers are unrestricted.

q. A liquid cooling system is mandatory, but radiators are unrestricted. The stock water pump may be modified; electric water pumps are prohibited.

r. Fuel pump is unrestricted.

s. Gaskets and seals are unrestricted except for

1. cylinder head gasket, Ford part number XS7Z6051CA or Victor Reinz part number 54502
2. a continuous o-ring of cross-section of 0.100 inches must be fitted to each intake runner groove between the intake manifold and the head which to ensures that no air by-passes the o-ring seal

t. Pump, fan, and generator drive pulleys are unrestricted.
u. The use of non-standard replacement fasteners (nuts, bolts, screws, studs, and washers) which are not connected with or which do not support the intake manifold or any moving parts of the engine are permitted.
v. Any tapered seat 14mm x 25mm (.984 inch) reach spark plugs may be used.
w. Ford OEM coil P/N 988Z12029A or any other single OEM type replacement coil is allowed.

1.5 Suspension: All parts must be of steel or ferrous material, with the exception of hubs, hub adapters, hub carriers, bearing and bushes, spring caps, abutment nuts, anti-roll bar links, shock absorber caps and nuts. Titanium is prohibited. Springs: steel only. Non-ferrous parts add Bell Cranks, Pivot Blocks. Shock absorbers: Steel or aluminum only.

1.6 Brakes: Light alloy brake calipers are prohibited, otherwise unrestricted. Brake rotors are restricted to ferrous metal.

1.7 Steering: Unrestricted.

1.8 Wheels and Tires: 13-inch diameter wheels with a maximum front rim width of 6 inches and rear of 8 inches only permitted. Material is unrestricted providing it is metal.

1.9 Transmission:

1.9.1 The gearbox may contain not more than four (4) forward gears and include an operable reverse gear, capable of being engaged by the driver while normally seated. The ratios are unrestricted.

1.9.1.1 The use of automatic and/or sequentially shifted gearbox is prohibited.

1.9.1.2 Electronic assisted gear change mechanisms and electronically controlled differentials are prohibited.

1.9.1.3 Gearboxes with shafts that are transverse to the longitudinal axis of the chassis are not allowed. The sole exceptions are the gearbox final driver (crown wheel) shaft axis and final driver shafts (half shafts). All change gears must be located in the case aft of the final drive.

1.9.2 Rear wheel drive only is permitted.

1.9.3 Final drive ratio is unrestricted.

1.9.4 The differential cannot be modified in any way to limit normal function. Torque biasing, limited slip, and locked differentials are prohibited.

1.9.5 Alternate flywheel Elite-001

1.10 Fuel System: Fuel cell must comply with ***Appendix X***.

1.11 Fuel Capacity: Maximum capacity 41 liters (10.83 U.S. gallons)

1.12 Weight:

1.12.1	Standard 2 Liter Ford, with cast iron head, standard cam:	1200lbs
1.12.2	Standard 2 Liter Ford, with cast iron head, lightened flywheel and alternative cam:	1200lbs
1.12.3	Standard 2 Liter Ford, with aluminum head:	1200lbs
1.12.4	Standard 2 Liter Ford, with aluminum head, and lightened flywheel	1200lbs
1.12.5	Ford Zetec, with club program	1200lbs

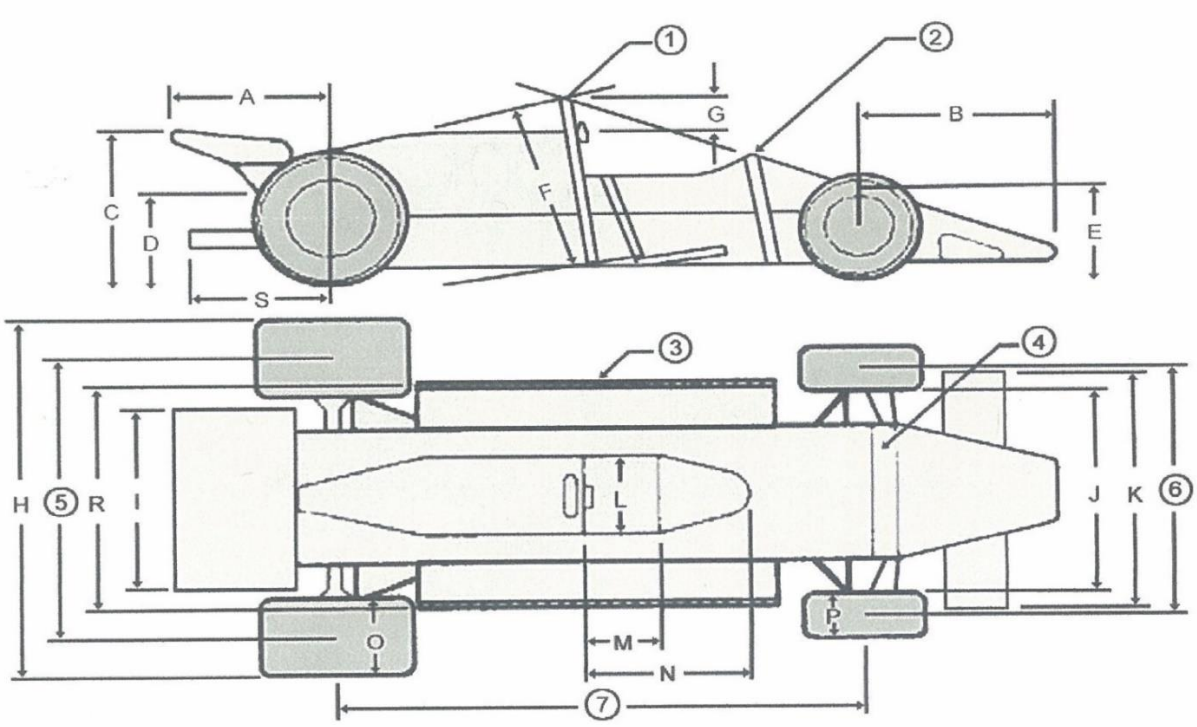

1	Safety Roll Over Bar	**5**	Rear Track
2	Substantial Structure	**6**	Front Track
3	Crushable Structure	**7**	Wheel Base
4	Substantial Structure		

Notes: Maximum height is measured with the driver aboard.
Maximum height excludes safety roll over bar on which there is no maximum height.
FIA substantial support structure 2 and 4 apply to certain international Formulae.

SINGLE SEATER DIMENSIONS

Refer to Drawing Above

A	Maximum rear overhang from rear wheel axis	80cm
B	Maximum front overhang from front wheel axis	100cm
C	Maximum height measured from the ground.	90cm
D	Exhaust height measured from the ground	30cm to 60cm
E	Maximum body height in front of front wheels	At front wheel rim height
F	Minimum safety roll over bar length in line with driver's spine	92cm
G	Minimum allowed helmet clearance	5cm
H	Maximum width	185cm
I	Maximum rear aerofoil width	95cm
J	Maximum body width behind front wheels	95cm
K	Maximum nose width	135cm
L	Maximum cockpit opening	45cm
M	Minimum cockpit parallel opening length	30cm
N	Minimum cockpit overall opening length	60cm
O	Maximum rear wheel width	Controlled
R	Maximum width including crushable	N/A
S	Maximum exhaust length from rear wheel axis	80cm
	Maximum wheelbase	200cm
	Minimum track	120cm
	Wheel diameter	13in

Formula Ford

1. Definition

Single-seat, open-wheel racing cars using standard Ford Cortina 1600 GT "crossflow" engines or the Honda Fit 1500 (L15A7) overhead cam engines and with firewall, floor and safety equipment as shown under ***Automobiles – General Regulations.*** Class designation letters shall be FF displayed on both sides of the car.

2. Engine

2.1 General-

The engine shall be standard Ford 1600 push rod "cross flow "or the Honda Fit 1500 (L15A7) overhead cam engine as installed in the following vehicles:

2.1.1 Original version: Cortina 1600 GT (through 1970 model)
2.1.2 Uprated version: Cortina 1600 (1971), Capri 1600 (1971)
2.1.3 Fit: Honda Fit (L15A7) overhead cam, as installed in the Honda Fit (2009 and later)

Components shall not be interchanged between the original and uprated versions of the engine unless specifically authorized. Regulations contained herein apply to both versions of the engine unless specifically stated otherwise. The engine may not be altered, modified or changed in any respect unless specifically authorized herein. The following engine components may be replaced with that of other alternative manufacture or source, provided said part is of the same material type (e.g., steel vs. steel; cast iron vs. cast iron; aluminum vs. aluminum), is dimensionally identical, performs no other function(s) than the original, and meets all other size, weight, functional tolerances, and specifications stated in the GCR pertaining to said components.

A Cylinder block
B Cylinder Head (excepting that cylinder Head may be constructed of cast aluminum alloy)
C Intake Manifold
D Camshaft
E Flywheel (allowance of 15.5#)
F Connecting Rods
G Pistons
H Wrist pins and keepers
I Cam followers
J Pushrods
K Valves
L Valve spring retainers and keepers
M Rockers, rocker shaft, rocker shaft towers and rocker spacers
N Gaskets and seals
O Timing chain, chain sprockets
P Crankshafts(excepting that crankshafts may be constructed of forged or cast steel alloy)

All replacement parts must be submitted to the Contest Board for approval and homologation.

2.2 Cortina Engines

2.2.1 The gasket face of the cylinder head may be resurfaced provided the maximum compression ratio is not exceeded and the minimum depth of the combustion chamber is maintained.

2.2.2 Valve guides are free, provided the position of the valve is not changed. Standard Ford replacement valves, with oversize stems, may be used as normal repair/maintenance procedures. Specifications under F, "Valves", must be observed. It is permitted to recut or replace valve seats. Valve seat angles are free. Exhaust emission control, air pumps and associated lines and nozzles must be completely plugged. It is permitted to polish parts of the engine providing the contour of the part is not altered and can be recognized as the original part. Balance of all moving parts of the engine is permitted provided that such balancing does not remove more material than is necessary to achieve such balance.

Maximum compression ratio:

10.0 to 1	original engine
9.3 to 1	uprated engine

The following specifications are used in determining compression ratio:

Uprated:	1.33cc	top ring to top of piston
	0.3cc	volume of valve protrusion
Original:	1.64cc	top ring to top of piston
Both engines:	4.75cc	head gasket

Minimum unswept volume per cylinder:

44.4cc	(original engine with standard pistons)
45.1cc	(original engine with .030" O/S pistons)
48.2cc	(uprated engine with standard pistons)

2.2.3 Block

Bore: May be enlarged for clearance between cylinder and piston.

Cylinder blocks with the following part number prefixes are permitted: 2737E, 691M, 711M, 771M, and 831M. It is permitted to modify the front of the Fiesta block (771M) to allow use of the front cover and water pump from other permitted. Cylinder liners may be fitted. (Part no. 2737E-6055C or D.) The top surface of the block may be milled or surface ground to obtain the maximum compression ratio specified above. Any steel center main bearing cap may be used. The oil pump mounting face on the block may be machined for the purpose of fitting an oil pump.

2.2.4 Cylinder Head

Ports may be reshaped by the removal of metal as long as the port diameter at the manifold face of the head does not exceed the following dimensions:

Inlet: 1.50” Exhaust: 1.16”

Combustion chamber (original engine only):

Minimum depth: 0.115”

Maximum length: 3.15”

Minimum volume per cylinder: 7.8cc

Reshaping is prohibited:

The use of the Pierce aluminum cylinder head is permitted.

2.2.5 Inlet Manifold

The parts may be reshaped by the removal of metal as long as the following dimensions are maintained:

	Original Engine	**Uprated Engine**
Maximum size at head face:		
Cyl. 1 &4	1.48” x 1.28”	1.24”
Cyl. 2 & 3	1.25”	1.25”
Maximum size at carburetor flange:	3.060” x 1.389”	3.80”

Max length: 3.80”; Primary chock end radius .709”; Secondary choke end radius: .787”

The carburetor face of the inlet manifold may be machined to the horizontal to compensate for fore/aft tilt of the carburetor. The diameter of the ports on the uprated engine may exceed the above listed dimensions if the casting bore is untouched and in its original state.

2.2.6 Pistons

Standard 0.015”, 0.030” or 0.040” oversize pistons may be used in the original engine. Only standard size pistons may be used in the uprated engine. Mahle pistons are not allowed as they do not meet minimum weight.

	Original Engine	**Uprated Engine**
Maximum Diameter:		
Standard:	3.189”	3.189”
0.015” o/s	3.204”	Not permitted
0.030” o/s	3.219”	Not permitted
Depth of bowl: (+ .005”)	0.500”	0.500”
Max diameter of bowl:	2.28”	
Min volume of bowl:	31.50cc	
Centerline to wrist pin to crown:	1.737” + .002”	1.737” + .002”
Overall height:	3.30”	3.30”
Min weight w/rings & pin:	525 grams	525 grams
Weight of pin:	115 + 2 grams	

Piston rings are free provided that:

2.2.6.1 One oil control and two compression rings are used.

2.2.6.2 No modification is made to the piston for the installation of the rings.

2.2.7 Valves

	Original Engine	**Uprated Engine**
Distance apart at centers	1.540” + .020”	1.540” + .020”
Maximum diameter Inlet:	1.502”	1.560”
Exhaust:	1.252”	1.340”
Overall length		
Inlet:	4.280” + .006”	4.367” + .020”
Exhaust:	4.260” + .006”	4.355” + .020”

Valves of other manufacture are permitted, provided they are o the same material, are dimensionally identical, and meet all other specifications of the standard Ford valve. Reshaping of the valves is specifically prohibited.

2.2.8 Camshaft

The camshaft lobe profile shall not be altered. The following specifications are provided for checking purposes:

Lobes, heel to toe:	Inlet:	1.311” maximum
	Exhaust:	1.312” maximum
Lobes, base circle radius:	Inlet:	0.540” maximum
	Exhaust:	0.545” maximum
Lift at top of push rod:	Inlet:	0.231” + .002” max
	Exhaust:	0.232” + .002 max
Lift at spring cap:	Inlet:	0.356” maximum
(zero tappet setting)	Exhaust:	0.358” maximum

Recontouring of the valve stem contact pad of the rocker arm is permitted provided the maximum lift at the spring cap is not exceeded. Offset camshaft/sprocket dowels are permitted. Cam profile shall be checked using the MCSCC procedure.

2.2.9 Valve Springs: Valve springs and valve spring shims are free except that:

2.2.9.1 No more than one spring may be used per valve.

2.2.9.2 The standard spring cap and retainers must be used. (Cap diameter: 1.07”.)

2.2.10 Push Rods

	Original Engine	**Uprated Engine**
Minimum stem diameter	0.25”	
Overall length:	7.64” minimum	

Minimum weight: 50 grams

2.2.11 Connecting Rods

Connecting rods must be of ferrous material. Center to center length: 4.925 +/- 0.020 inches. Minimum weight: 630 grams. **Note**: Weights include cap, bolts, and small end bush, but not big and bearing shells.

2.2.12 Crankshaft

Weight:	**Original engine**:	23lbs 8 oz minimum
	Uprated engine:	24lbs 8oz minimum
Stroke (at piston):	3.056" + .004"	
Crankshaft pulley:	free	

Either crankshaft may be used in either engine. The crankshaft may be shot peened.

2.2.13 Flywheel (allowance of 15.5#)

Weight with ring gear and dowels:

Original Engine:	17.5lbs minimum
Uprated Engine:	19.5lbs minimum

Flywheel may be machined to achieve minimum weight, including Ford Pinto 1600. flywheel locating dowels are permitted.

2.2.14 Carburetor

Part number: 2737E-9510B (Weber 32 DFM or DFD)

Venturi diameter:	Primary:	26mm
	Secondary:	27mm

Uprated (Kent) engine: Weber 32-36 DGV

Venturi diameter:	Primary:	26mm
	Secondary:	27mm

Permitted modifications:

The fitting of any jets (including accelerator pump discharge nozzle) which may be fitted without modification to the carburetor body.
Modification or substitution of external throttle linkage.
The fitting of internal and/or external anti-surge pipes
The removal of the air cleaner.
The fitting of a velocity stack (intake air horn).
The removal of the chock butterflies and linkage.

2.2.15 Fuel Pump: Free

2.2.16 Exhaust Manifold: Free

2.2.17 Lubrication System

Oil pump and sump: Free
Dry sump system is permitted.

2.2.18 Cooling System

Radiator, fan and water pump: Free
Pump/fan/generator drive belt: Free

2.2.19 Electrical Equipment

Distributor: Distributors are unrestricted providing they retain the original drive, location, and housing type (Motorcraft, Bosch, Lucas, or Mallory) are retained. The distributor is defined as the component that triggers the LT current and distributed the HT current. The ignition timing may only be varied by vacuum and/or mechanical means. It is prohibited to use any other method or component to trigger, distribute, or time the ignition. The vacuum advance mechanism may be removed, and the distributor advance plate may be secured by soldering or welding or by suitable fasteners. The advance curve and advance springs are unrestricted. Generator/alternators are not required. All other electrical components are unrestricted. Mallory distributor #4558101 is allowed.

2.2.20 Miscellaneous

The timing chain/sprocket cover may be altered or replaced.
The use of the following non-standard replacement parts is permitted provided their use does not result in any unauthorized modification of any other component:

- Fasteners (nuts, bolts, screws, studs, etc.)
- Gaskets may be of any manufacturer. Head gasket shall have a minimum thickness of .038", and a minimum aperture opening of 3.287". Intake manifold to cylinder head gasket shall have a maximum thickness of .035". Carburetor to intake manifold gasket shall have a maximum thickness of .264". Copper head gaskets are prohibited.
- Washers.
- Seals.
- Connecting rod, crankshaft and camshaft bearings of the same size and type as original. Normal oversize/undersize bearings are permitted.

Mechanical tachometer drive is permitted.
The crankshaft breather may be altered or removed.
The rocker cover may be altered to provide for crankcase ventilation and the filler cap may be altered or replaced.
The crankshaft and main bearing caps may be treated with saltbath nitrating covered under SAE specification AMS 2755A (Tuftriding, etc.)
The use of any oil or lubricants.

Valve or rocker covers may be substituted, provided no additional function is provided by the replacement.
Water pump, fan and generator/alternator pulley(s) are free.

2.3 Fit Engine Preparation

2.3.1 Unless specifically authorized, all systems (including, but not limited to, fuel injection, engine management, electrical, cooling, and lubrication) must conform to OEM specifications as stated in the Honda Fit factory service manual (Honda P/N 61TK600 or later revisions). Print, CD, DVD, and manufacturer-sponsored Internet-based copies of the manual will be considered valid. Balancing, blueprinting, lightening, or any other modification of moving parts of the engine is prohibited. Maximum compression ratio: 10.55 to 1 (within Honda Fit factory sevice manual limits).

2.3.2 Replacement of external engine parts with unmodified parts conforming to OEM specifications for the purposes of maintenance is permitted. replacement of rubber fluid hoses with braided metal-covered hose is permitted. the addition of extra hose clamps on oil hoses is permitted. Gaskets and seals must be of Honda manufacture and as specified in the Fit service manual. Superseding part numbers will be considered equivalent to the Honda part numbers listed herein.

2.3.3 Block

Bore: Cylinders may be honed to a maximum of 73.065mm (2.8766") diameter. Cylinder sleeves are not permitted.
Honda cylinder block P/N 11000-RP3-810 shall be used.
Stock main bearing caps, girdle, and hardware shall be used.
Minimum deck height from crankshaft centerline is 220.00mm (8.661").

2.3.4 Cylinder Head

Permitted Heads: Honda P/N 12200-RB0-G00 (USA Spec) or Honda P/N 12200-RB0-000 (JDM Spec).
The original casting may not be modified in any way, including porting, polishing, or machining. Replacing or recutting valve seats is permitted provided the stock 3-angle cut of the valve seat per the Honda factory service manual is retained. The gasket face may be resurfaced providing the maximum compression ratio is not exceeded, or to the specified service limite of 0.2mm/0.008" (based on 120mm/4.72" height). Valve guides may be replaced with OEM Honda guides only, provided the position of the valve is unchanged.
Honda head gasket P/N 12251-RB0-004 (minimum compressed thickness 0.76mm +/- 0.05mm) shall be used.
HPD cylinder head breather restrictor P/N 15262-F21S-A200 shall be used.
Honda intake valve guide P/N 12204-PJ7-305 (oversized for repair)
Honda exhaust valve guide P/N 12205-PJ7-305 (oversized for repair)

2.3.5 Inlet Manifold

Honda lower manifold P/N 17100-RB1-000 shall be used. The lower manifold may not be modified in any way, including porting, polishing, machining, adding, or removing material, or coating inside or outside.
The HPD upper manifold, throttle body assembly, and air box shall be used without any modifications. External throttle return springs are free.
Only OEM Honda Fit r HPD inlet manifold gaskets and sensors are permitted.
Intake manifold gasket: Honda P/N 17105-RB0-004
EGR chamber cover gasket: Honda P/N 17105-RB0-004
Intake port gasket: Honda P/N 17115-RB0-007
Restrictor Gasket: HPD P/N 17399-F21S-A200 (2 required)
An HPD air inlet restrictor (29.0mm ID, 3.175mm/ 0.125" thick) shall be installed correctly in the air intake system. No modifications to the restrictor are allowed. If the restrictor exceeds the specified diameter in any measurement, it will be considered non-compliant.

2.3.6 Pistons

Standard Honda pistons P/N 13010-RB1-000 shall be used.
Maximum diameter (16mm from bottom of skirt): 72.990mm/2.8736"
Centerline of wrist pin to crown (maximum): 26.21mm/1.032"
Overall height, skirt to crown edge (maximum): 47.80mm/1.882"
Minimum weight of piston pin only: 66g/2.25oz
Minimum total weight of piston, pin, and connecting rod: 543.5g/18.85oz
Ring groove width, top: 1.04mm +/- 0.01mm
Ring groove width, middle: 1.02mm +/- 0.01mm
Ring groove width, oil: 2.00mm +/- 0.01mm
Piston rings: Two compression rings and one 3-piece oil ring are required. Ring packs Honda P/N 13011-RB1-004 (Riken) or 13011-RB1-006 (Nippon) shall be used. Rings shall be gapped to between 0.006" to 0.024".

2.3.7 Valves

Only OEM Honda Fit valves may be used. Valve location and angle must remain as stock. Reshaping of valves is prohibited.
Inlet valve Honda P/N 14711-RB0-000
Diameter, maximum: 28.15mm
Length, maximum: 119.15mm
Stem Diameter, minimum: 5.45mm
Exhaust Valve Honda P/N 14721-RB0-000
Diameter, maximum: 23.15mm
Length, maximum: 117.85mm
Stem diameter, maximum: 5.42mm

Valve stem installed height, maximum: 46.8mm intake/46.9mm exhaust Honda valve stem seals P/N 12210-PZI-004 (intake seal A) and 12211-PZI-003 or -004 (exhaust seal B) shall be used.

2.3.8 Camshaft

The following stock Honda parts shall be used without modifications:
Camshaft P/N 14110-RB1-J00
Cam trigger (CMP pulse) plate P/N 14221-RB0-003
Camshaft sprocket P/N 14211-RB0-J00
Camshaft sprocket P/N 13621-RB0-003
Timing chain cover assembly P/N 11410-RB1-000
Crankshaft pulley P/N13810-RB0-003
Lobes, heel to toe: Intake, primary: 35.240mm Intake, secondary: 36.200mm Exhaust: 35.490mm
Lift at retainer: Exhaust 9.200mm Intake (VTEC on) 9.900mm Intake (VTEC off) 8.680mm
Camshaft timing shall be as specified in the Honda Fit service manual. With the #1 cylinder at TDC, the “UP” mark on the cam sprocket shall be at the top, and the TDC indicating grooves on the cam sprocket shall line up with the top edge of the cylinder head.
At lobe centers (1mm after opening to 1mm before closing)
Intake (VTEC on): 111 degrees, +/- degree
Exhaust: 119 degrees, +/- 1 degree

2.3.9 Valve Springs and Rockers

Stock Honda rocker arm assemblies P/N 14620-RB1-010 shall be used. Stock Honda valve springs P/N 14761-RB1-003 intake (free length 45.88mm) and 14762-RB1-007 exhaust (free length 54.52mm) shall be used. Valve spring shims are not permitted.

2.3.10 VTEC

The stock Honda VTEC activation valve P/N 15810-RB0-G01 shall be used. The HPD ECU will activate the VTEC system at 5200 rpm.

2.3.11 Connecting Rods

Stock Honda connecting rods P/N 13320-RB1-000 shall be used.
Minimum weight with cap and bolts: 280.0g/9.88oz
Maximum length, center-to-center: 149.05mm/5.868”

2.3.12 Crankshaft

Stock Honda crankshaft P/N 13310-RB1-000 shall be used.
Crankshaft minimum weight (less pulsar, hardware, and pilot bearing): 27.7lbs.
Maximum stroke at piston: 89.55mm/3.526”
Stock Honda crankshaft balancer/pulley P/N 13810-RB0-003 shall be used.
Balancer minimum weight: 3.90lbs
Modification of the crank pulsar is prohibited.
Only OEM Honda main and rod bearings from the standard range (as listed in the factory Fit service manual) are allowed. No modification to the bearings is allowed.

2.3.13 Flywheel

Stock Honda flywheel P/N 22100-RB0-005 shall be used.
Flywheel minimum weight with ring gear: 14.4lbs
Stock Honda clutch P/N 22300-RB0-005
Clutch minimum weight (less friction disc): 7.0lbs
Stock Honda friction disc P/N 22200-RB0-005 shall be used.
Friction disc weight (new): 2.1lbs

2.3.14 Fuel Injection System

The HPD fuel rail shall be used without modifications. Fuel pressure regulators are unrestricted provided they serve no addition purpose.
Permitted injectors: Honda P/N 16450-RNA-A01

2.3.15 Fuel Pump: Free

2.3.16 Exhaust Manifold

HPD exhaust manifold P/N 18150-F21S-A200 or 18150-F21S-B200 shall be used. Shortening of the manifold within HPD specifications is allowed when needed for tailpipe clearance. The exhaust shall have a 2” ID from the manifold to the outlet and shall meet the provisions of Section 3. Location of the Lambda sensor in the exhaust is unrestricted provided it is located after the HPD manifold. Exhaust wraps or other exhaust insulation (including coatings) is unrestricted except that coatings may not be applied to the HPD manifold.

2.3.17 Lubrication System

The oil pan, scavenge pump, and scavenge pump pulley shall be unmodified HPD parts. Scavenge pump rotor length: 25.400mm/1.000” Rotor OD: 44.400mm/1.748”
The stock Honda Fit oil feed (pressure) pump shall be used with no modifications. Oil pressure may be adjusted to compensate for wear. The oil pressure sensor shall be located as installed by HPD.
Oil pump drive belts are free provided the type and dimensions match HPD specifications.
Oil hose routing and filtration systems are free.

2.3.18 Cooling System

Stock Honda water pump P/N 19200-RB0-003 and pump pulley P/N 19224-RB0-000 shall be used. Drive belts are free provided they are designed for use with the Fit pulleys.

HPD engine water inlet and outlets shall be use without modifications. Thermostat is free as long as it does not require modification to the housing. Plugging the thermostat bypass is permitted.
Radiator(s): Free.

2.3.19 Electrical Equipment

The HPD engine wiring harness and ECU shall be used without modifications. Altering the ECU maps or inputs is prohibited. In the case of a protest, the competitor may be required to swap ECUs
Stock Honda ignition coils P/N 30520-RB0-003 shall be used.
All engine sensors feeding the ECU, as well as any other sensors supplied by HPD, shall be used without modification or relocation. Altering sensor mounts or wiring (including “piggy backing” the wiring) is prohibited. Additional sensors for running dash gauges may be added. It is prohibited to use the HPD/Honda ECU sensors as gauge senders.
Stock Honda alternator P/N 31100-RB0-004 or HPD alternator P/N 31100-F21S-A200 shall be used without modification. The stock alternator drive pulley shall be used. All connections to the alternator shall be though the HPD engine wiring harness. Disabling the alternator is prohibited.

2.3.20 Miscellaneous

All Honda emission controls shall be removed. The HPD blanking plate shall be used to block off the emission control ports. The VTEC activation valve shall be retained and functioning.
Air filter: Free.
Unleaded premium pump gasoline (91-93 RON) is recommended.
The use of the following non-standard replacement parts is permitted provided their use does not result in any unauthorized modification of any other component:

- Fasteners (nuts, bolts, screws, studs, etc) except as otherwise noted. Head bolts, rod bolts, flywheel bolts, and crankshaft pulley bolt shall be stock Honda or unmodified HPD parts.
- Spark plugs.
- Tachometer and gauges.

Oil and lubricants are unrestricted, but the use of oil and lubricants meeting the specifications in the Honda Fit factory service manual is highly recommended.
The oil filler cap may be removed and the resulting hole may be plugged.

3. Exhaust Outlets

3.1 Exhaust outlets on cars shall not extend more than 60cm (23.6”) behind the centerline of the rear axle and shall be positioned between 30cm (11.8”) and 60cm (23.6”) from the ground, measured to the bottom of the exhaust pipe.

4. Transmission

Any transmission may be used with not more than four (4) forward gears and an operational reverse gear.

5. Final Drive

Any final drive unit may be used except:

5.1 Drive shall be to the rear wheels only.

5.2 Limited slip and locked differentials are prohibited.

6. Clutch

The use of any single plate clutch is permitted provided no modification is made to the flywheel other than changing the points of attachment of the clutch to the flywheel.

7. Chassis/Frame

The chassis is defined as the frame. It must be a steel space frame. Monocoque-type structures are prohibited. Sheet material affixed to the frame by welding, bonding or riveting, or by bolts or screws which are located closer than six-inch center, are define as stress-bearing panels. The undertray, for safety reasons, shall be a stress-bearing panel to the rear of the front axle. No extension of the undertray or attached components at this plane for the purpose of generating down force or ground effects are permitted. Its curvature must not exceed one inch. The mountings for brake and clutch pedals and cylinders and for the instrument panel and the bulkhead (panel) behind the driver may be stress-bearing. No other stress-bearing panels are permitted. Brackets for mounting components, such as the engine, transmission, suspension pickups, instruments, clutch, and brake components and body panels may be non-ferrous, of any shape and fastened to the frame in any manner. Gussets are defined as of steel, fastened to a maximum of two members, and are specifically permitted.

8. Suspension and Running Gear

Suspension is defined as the systems of springs, shock absorbers, A-arms, links, etc., supporting the vehicle on its axles. Sway bars, sway bar links, steering rack housings, steering links, etc., are not classified as suspension or running gear for this application. All components shall be of steel, with the exception of springs, rear hub adapters and hub carriers, and bearings and bushings, which are free. Alloy front hubs may be used. Shock absorbers are free except that body material must be steel or aluminum. All components which are not defined as chassis/frame or suspension or running gear are free, unless otherwise restricted by the GCR.

9. Body

9.1 Definition of Coachwork:
Externally: All external parts of the car which are in the airstream and situated above a plane passing though the center of the wheel hubs, with the exception of the units definitely associated with the functioning of the engine, transmission or the safety roll bar.

Internally: All visible parts of the passenger compartment.

9.1.1 The coachwork opening giving access to the cockpit must have the following minimal dimensions:
Length: 60cm (23.622 inches)
Width: 5cm (17.717 inches) This width must extend over a length of 30cm (11.811 inches) measured from the rearmost point of the seat backrest toward the front.

9.1.2 The driver's seat must be capable of being entered without the manipulation or removal of any part or panel.

9.1.3 Coachwork, including fuel tanks, shall not exceed a maximum width of 95cm (37.4 inches).

9.1.4 No part of the coachwork, with the exception of the safety roll bar, shall exceed in height a horizontal plane, 80cm (31.5 inches) above the lowest point of the entirely sprung structure of the car.

9.1.5 No part of the coachwork shall extend more than 100cm (39 inches) behind the centerline of the rear axles.

9.1.6 Any specific part of the car which has an aerodynamic influence on the stability of the vehicle must be firmly fixed with no provisions for adjustments to vary down force. No aerodynamic devices (e.g., skirts, body sides, etc.) may extend below the lower surface anywhere on the car to the rear of the front axle.

9.1.7 Side-mounted radiators (behind the front wheels) may extend beyond the 95cm (37.4 inches) limitation, but not beyond a vertical plane passing through the centerline of the front and rear tires. Any portion of a radiator that extends beyond the 95cm (37.4 inches) limitation cannot be covered with any type of shrouding. Radiators mounted in front-mounted positions cannot exceed the 95cm (37.4inches) limitation.

9.2 Wings and other airfoil devices which have the principle effect of creating aerodynamic downthrust are prohibited. Airfoil: Any device or part of a car (excepting normal and conventionally styled bodywork) which has a principle effect of creating aerodynamic downthrust. Within this definition may be included forward facing gaps or openings in the bodywork, but shall not include spoilers in the form of raised surfaces, continuous with the body surface, and not wider than the body surface.

9.3 Fuel filler necks, caps, or lids may not protrude beyond the bodywork of the car.

9.4 Fuel tank air vents must be located at least 25cm (9.843 inches) to the rear of the cockpit.

10. Brakes

Free, except that disc brakes are restricted to cast iron calipers.

11. Wheels

Wheels are free except:

11.1 Diameter must be 13 inches.

11.2 Rim width may not exceed 5.5 inches.

12. Minimum Weight

Minimum weight, as raced, including driver and safety equipment:

Cars with original engine: 1050lbs
Cars with uprated engine: 1100lbs

Club Formula Ford

1. GCR

All Club Formula Fords will be subject compliance with all MCSCC General Competition Rules and those specifications pertaining to Formula F except 2.1.3 and Section 2.3

2. Club Formula Ford Committee

2.1 The purpose of the CFF Committee shall act as a liaison between the CFF competitors and officials/administrators.

3. Suspension

All Formula Fords conforming to the MCSCC GCR manufactured prior to January 1, 1981 and which have the spring/shock mechanism(s) outboard one axle are eligible. A suspension is outboard if the spring/shock mechanism is further in distance from the centerline of the chassis than the upper suspension attachment point nearest the centerline of the chassis. The upper spring/shock mount may attach at the same centerline as the suspension mounting point or may be further outboard of it. The lower spring/shock mounting point must be further outboard than the upper spring/shock mount and attach directly to either the hub carrier or one or both lower suspension links. Trailing arms or radius rods are not considered to be suspension links. Cars should be raced as nearly as possible to their model's original specifications. The chassis may not be modified or updated except to improve driver safety. Suspensions may not be modified or updated except that stronger materials may be used as long as they match the dimensions of the original piece. Shock absorbers are free except that body material must be steel or aluminum. **Example:** The hub carrier may be a weldment instead of a casting as long as the original suspension links and spring/shock mounting points are the same.

4. Other Allowed Fords

Van Diemen RF81	Tiga FFA81	Citation Zink Z16 outbrd Version
Crossle 45F	1981 Gemini	Pro Racing Services RH02 aka: PRS RH02

5. Tires

5.1 Tire size is free provided the tires fit Formula Ford (13 x 5.5inch) wheels.

5.2 Tire manufacturer sidewall markings must remain legible.

5.3 Tires of the same manufacturer and compound shall be used on all 4 wheels.

5.4 Slick and treaded tires in the following manufacturer and rubber compounds are allowed:

Hoosier Compound R60A	American Racer Compound 133
Goodyear Compound 600	Avon ACB9-A29 compound slick
Dunlop CR82 or CR84 9092 compound tread	Sumitomo HTR-200 series tread

Hoosier 135/545-13 VFF fronts and 165/580-13 VFF rears

5.5 The following rain tires are allowed:

5.5.1 Any racing tires with the word "WET" or "RAIN" molded into the sidewall.

5.5.2 Goodyear tires marked with any of the following codes: D0647, D0648, R-8W, G-18, 807-089-096, 1883, 2519, 807-502-096, 1319, 2520

5.5.3 Rain tires with molded "dogbone", "chainlink", H-pattern, or other vintage tread patterns approved by the Club Formula Ford Committee on a case-by-case basis.

5.6 The following tires are specifically disallowed:

Hand-grooved slick tires	Intermediate tires
DOT-approved tires not included under Rule 5.4	Any American Racer tires not allowed under rule 5.4.2
Any Yokohama tires	Any slick and treaded tires not allowed under rule 5.4

Goodyear SRF rain tires (Code 807-189-096, SRF tread, Part # 2524)

6. Tire Declaration

6.1 Tire manufacturer and compound will be declared in Tech Inspection. Those competitors using ineligible tires or tires not matching the prior declaration will be disqualified from the event.

6.2 In the interest of safety, rule 6.1 will be waived in the event of rain or other inclement weather.

7. Minimum Weight

7.1 Original Ford Cortina Engine 1100lbs

7.2 Kent Uprated Engine 1150lbs

7.3 Weight Assessments

7.3.1 CFF Vehicles that have been modified from their model's original specifications shall be added the following assessments to the minimum weight:

7.3.1.1	Aluminum cylinder head	25 lbs
7.3.1.2	Transaxle modifications-lightened or aluminum differential carrier	25 lbs
7.3.1.3	Aluminum bodied, dual chambered, external reservoir shock absorbers	25 lbs

7.3.2 Maximum minimum weight with all penalties would be 1225 lbs

8. Class Identification

All cars will carry the class identification "CFF" on both sides of the car.

9. Protests

These rules are to be considered an addendum to the Supplemental Regulations for an event. Any infraction by or protest of any competitor with regards to those rules will be judged under the GCR.

Formula Vee

1. Definition:

Single-seat, open-wheel racing cars based on standard Volkswagen 1200 series type 1, U.S. model sedan components, and restrictive in specifications so as to emphasize driver ability rather than design and preparation of the car. Formula Vee is a restricted class. Therefore, any allowable modifications, changes, or additions are as stated herein. There are not exceptions. **If in doubt, don't.** No components of the engine, power train, front suspension or brakes may be altered, modified, or changed, nor be of other than VW manufacture, unless specifically authorized. Any external surfact of the suspension, brakes, and transmission/rear axle may be painted, plated, or anodized. Engine components shall be assembled in standard configuration. Exceeding the wear limits specified in the VW manual or other official VW guides is not prohibited, provided that tolerances, dimensions and specifications stated in this GCR are met.

2. Weight and Dimensions

Minimum weight, with driver:	1025lbs
Wheelbase, minimum:	81.5"
Wheelbase, maximum:	83.5"
Track, front:	Standard VW – 51.7"
Track, rear:	49 13/16" + 1/8" – 5/8"
Overall length, minimum:	123" (includes exhaust)
Overall length, maximum	127" (includes exhaust)
Body depth at firewall, maximum:	25"

3. Suspension

3.1 The front suspension and steering shall be standard VW sedan as defined herein. The following modifications are allowed or an exact replica of the same material and dimensionally identical.

3.1.1 Removal of one torsion bar.

3.1.2 The use of any anti-sway bar(s), mounting hardware and trailing arm locating spacers.

3.1.3 Use of any shock absorber which can be mounted on the standard mounts. Spring shocks are prohibited.

3.1.4 Relocation of the steering gear box to any position utilizing an appropriate mounting structure is permitted. Pitman arm may be modified or replaced. Tie rods may be replaced. Steering damper mount and/or the steering box locating bumps may be removed.

3.1.5 Steering column may be altered or replaced and any steering wheel may be used.

3.1.6 Steering Knuckle: Use of non-OEM steering knuckle is permitted. Standard steering arms may be altered or replaced. Speedometer cable hole may be plugged. No other modification of the spindle is permitted.

3.1.7 Modification of the standard front torsion bar(s).

3.1.8 The rubber portion only of the bump stop may be altered or removed.

3.1.9 Caster, camber, and toe in/out settings are unrestricted. Clearance of carrier or trailing arm to eliminate binding is permitted. Offset suspension bushings are permitted.

3.1.10 Front end ride height adjustor(s) may be used provided they are not adjustable from the cockpit.

3.1.11 No structure, item, or component (including the battery) other than bodywork, can protrude further than ten (10) inches from the lower axle beam tube. Any item protruding further than eight (8) inches must include a vertical safety plate. This plate must be constructed of no less than .060" 6061-T-6 aluminum or no less than 16 gauge steel. The plate shall have a minimum frontal surface area of 42 square inches, and shall have a height of not les than four (4) inches and a width of not less than six (6) inches. The plate may have no more than ½" curvature or deflection from the horizontal or vertical plane, and shall be attached to the chassis (frame) at all four corners. The lower braces shall not exceed a 15-degree upward angle when measured from the horizontal plane of the lower frame tubes. If a vented lead acid battery is mounted in front of the axle beam, it shall be encased in a marine type container. It is recommended that the front area of the nose be filled with foam to aid in impact absorption.

3.2 The rear axle assembly shall be standard VW sedan as defined herein with axle location provided by a single trailing arm on each axle. The rear axle tube may be rotated about its axis. Coil spring(s) shall provide the primary springing medium, with telescopic shock absorber(s) mounted inside the spring(s). Cables, straps, or other positive stops may be used to limit positive camber. An anti-roll bar or camber control device may also be used. When said anti-roll bar or camber control device is removed the required coil spring(s) must continue to perform functionally.

3.3 Wheels shall be standard 15" x 4J, or 4.5, provided wheels are of same width on same axle as used on the 1200cc or 1300cc VW sedan as defined herein. Wheels may be balanced only by the use of standard automotive balance weights (adhesive or clip-on). Hub cap clips shall be removed.

3.4 Any tire size may be fitted, except that radial race tires (slicks) are not allowed.

4. Brakes

4.1 Brake drums, backing plates and wheel cylinders shall be standard VW sedan, as defined herein, or an exact replica of the same material and dimensionally identical. Ribbed-type rear brake drums (part no. 113-501 615 D or F) may be used in place of the 1200 series rear brake drums.

4.2 These cars shall be equipped with a dual braking system operated by a single control. In case of a leak or failure at any point in the system, effective braking power shall be maintained on at least two wheels. Any master cylinder(s) may be used.

4.3 A separate hand brake (emergency brake) is not required. Removal of the hand brake and operating mechanism is permitted.

5. Engine

The engine shall be standard VW power plant, as normally fitted to VW sedans as defined herein. Any engine part(s), listed by the manufacturer (VW) as a current, superseded, replacement part for the standard VW 1200 series, type 1, U.S. model sedan and interchangeable with the original part(s), may be used. Turbo charging is not permitted. The engine/transmission shall be mounted in the chassis with the transmission to the rear. The following component parts may be replaced with that of other manufacture, provided said is of the same material, is dimensionally identical, and meets all other tolerances and specifications stated in the GCR:

5.1 Engine case
5.2 Cylinder heads
5.3 Cylinders (an O-ring for centering is permitted)
5.4 Pistons and wrist pins – minimum combined weight without clips or piston rings = 330.0 grams
5.5 Cam followers – minimum weight = 60.0 grams
5.6 Connecting rods with bolts and small end bushing – minimum weight = 440.0 grams.
5.7 Oil pump – exact replica of any standard VW oil pump
5.8 Ignition points
5.9 Distributor cap
5.10 Fuel pump – any standard type VW fuel pump which can be fitted without modification of any other part.
5.11 Crankshaft – minimum weight = 16.00 lbs (7.240 kilograms)
5.12 Crankshaft gear
5.13 Flywheel
5.14 Pressure plate
5.15 Clutch disc
5.16 Throw out bearing
5.17 Push rods
5.18 Push rod tubes

6. Engine/Transmission Mount

The engine/transmission shall be mounted in the chassis with the transmission to the rear. Allowed:

6.1 Removal of the carburetor air cleaner and choke mechanism.
6.2 Replacement of standard exhaust system with any exhaust system terminating 1” to 3” behind the rearmost part of the body.
6.3 Lightening of the flywheel to a minimum of 12 pounds.
6.4 Balancing of all moving parts of the engine, provided such balancing does not remove more material than is necessary to achieve the balance, except on those component parts where weights are specified. The crankshaft may be ground and the case may be machined to accommodate the use of standard factory oversize/undersize crankshaft bearings, provided the crankshaft location is not changed.
6.5 Polishing of the intake and exhaust ports, provided such polishing does not enlarge the exhaust port beyond 33mm inside diameter, and the intake port beyond 29mm inside diameter. The measurements are to be taken at the juncture of the seat insert and the aluminum port material, and at the manifold face. Valve seat angles must be machined as specified in the official VW Workshop Manual.

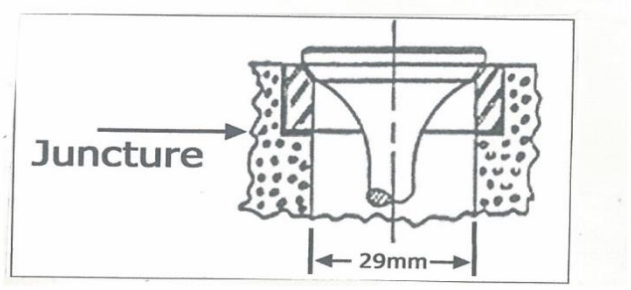

6.6 Matching of manifold flanges is permitted
6.7 Complete or partial removal of any cooling duct component. Removal of the fan and the fan housing. Fan belt origin is unrestricted. The use of a fan belt is optional.
6.8 Fitting of any standard Solex 28 PCI or PICT carburetor. The use of any jets or venturi of standard VW/Solex dimensions, which may be fitted without alteration to the carburetor body. The venturi shall be fitted in the standard position, but its internal diameter may be machined. The carburetor may be rotated 180 (degrees) about its vertical axis. Modification of the float is allowed as long as no change is made to the float chamber and/or float valve.

6.8.1 Carburetor shall remain untouched with the following exceptions:

6.8.1.1 No material shall be added.
6.8.1.2 Bead-blasting is permitted for cleaning only.
6.8.1.3 Throttle shaft – shall be a minimum of 0.185” with throttle plate installed. Machined sides shall remain flat and parallel with no chamfering or radiusing.
6.8.1.4 Throttle plate – shall be a minimum of 0.053”, flat and parallel with no chamfering or radiusing. Diameter shall be a minimum of 1.095”.
6.8.1.5 Carburetor top – the junction of the bowl and bore may be radiused. The bored beneath the radius shall be a maximum of 1.120”. Accelerator pump boss shall remain original. The orifice in the base of the accelerator pump boss shall not allow a #56 (0.046”) drill bit to pass through (maximum hole diameter shall be less than 0.046”).
6.8.1.6 Carburetor body – the removal of flashing from internal surfaces is permitted, but no additional material is to be removed from the casting in the area of the bore, emulsion tube carrier, or any carrier supports. Bore diameter from throttle shaft down shall not exceed 1.110”.

6.9 Fitting of any standard VW distributor (not restricted to 1200 series). Use of any standard six (6) or 12-volt non-transistorized ignition coil. Mounting location is unrestricted.

6.10 The heat riser tube and heat sink shall be removed. Removal of metal from the interior of the intake manifold and the interior rust-proofed is permitted provided that the following dimensions are not exceeded: Down tube: The down tube shall be measured at two different locations within an area between .500" and 2.00" above the horizontal manifold tube. Each measurement shall be taken four (4) times, rotating around the circumference of the tube, and averaged. Averaged down tube dimension shall not exceed 1.140" O.D. Horizontal tube: The horizontal tube shall be measured at four different locations on each side of the down tube. The area to be measured on each side of the down tube is defined as being between the bend and a point that is 1.500" from the center of the down tube connection. Each measurement will be taken four (4) times, rotating around the circumference of the tube, and averaged. Averaged. Averaged horizontal tube dimension shall not exceed 0.994" O.D. the manifold shall not weight less than 24 ounces. All exterior surfaces shall be in original condition and unpainted but may have a thin transparent coat of rust-proofing material.

6.11 Voltage regulator, generator, and/or generator stand may be removed.

6.12 The installation of baffles housed completely within the original oil sump and crankcase.

6.13 The use oil temperature indicating device in the crankcase.

6.14 The use of any standard VW oil pump. The oil pump cover may be modified.

6.15 The use of any valve spring shims.

6.16 The following standard dimensions and tolerances of engine components are included as information and shall be observed:

Maximum bore:	3.040"
Stroke:	2.520" +/- 0.005"
Min Capacity of Combustion Chamber in Head:	43.0cc Minimum (Polishing and/or tooling is prohibited.)
Min Depth, Top of Cylinder Barrel to Top of Piston:	0.039" Minimum

The above dimensions may be achieved by machining any previously machined surface, provided that the total surface is machined on the same plane as the previously machined surface. The above dimensions shall be the average of all four (4) cylinders.

6.17 The use of any VW clutch of the same diameter as fitted to standard VW sedan as defined herein. The standard clutch operating arm may be modified to allow its attachment in any appropriate position.

6.18 An oil sump extension may be fitted utilizing the oil strainer cover plate, provided the extension does not extend horizontally beyond the edge of the oil strainer cover plate and the capacity does not exceed 250cc. The oil pump pickup pipe may be extended into the sump extension. Accumulators (Accusump) may be fitted.

6.19 Replacement of oil gallery plugs with threaded plugs.

6.20 The following standard dimensions are included for information only and shall be observed:

Exhaust valve diameter:	1.102" or 1.18"
Intake valve diameter:	1.18" or 1.24"

Reprofiling of valves is not permitted.

6.21 The crankcase may be machined to permit the use of standard VW camshaft bearing inserts, provided that the camshaft location is not changed. The use of the two-relief valve crankcase, VW Pt. #111-101-025E, is permitted.

6.22 Where minimum weights are specified, any lightening is permissible provided the original part complied with the dimensional restrictions set forth.

6.23 A VW "D" camshaft, part no. 113-109-025D; -017D; -019D; -021D; -023D; or -027D, or an exact replica of the same material and dimensionally identical must be used. The maximum lift at the valve spring collar with zero valve clearance is:

With 1200 rocker arms – intake -	.334" + 0.000"
With 1200 rocker arms – exhaust-	.3165" + 0.000"
With 1300/1500 rocker arms – intake -	.354" + 0.000"
With 1300/1500 rocker arms – exhaust -	.3365" + 0.000"

The camshaft profile shall match exactly those which are specified by the official SCCA camshaft plots, plus or minus .002". It is permitted to regrind the camshaft to duplicate (but not exceed) the official SCCA profile. In so doing, the relationship between the centerlines of peak lift at the exhaust/intake lobes shall remain at 214 degrees 15 minutes, plus or minus one (1) degree. (Reference the Official SCCA Camshaft Checking Procedure.) The camshaft timing may be changed in relationship to the crankshaft by utilizing an offset key at the crankshaft timing gear. Camshaft timing is unrestricted within the restrictions provided as authorized above. The camshaft profile shall be checked using the official procedure published by the MCSCC.

6.24 Installation of a spark plug hot repair utilizing standard thread repair methods, such as Helicoil or shrink in plug, and providing that the spark plug centerline is not changed.

6.25 A single standard automotive oil filter of not more than one quart total capacity, and a suitable mounting bracket and bypass valve may be installed. Cooling fins are not permitted on any component. Only flexible unfinned one inch max. outside diameter oil line (maximum length: 12 feet) and suitable fittings may be used. Modification to the lubrication system to facilitate installation of the oil filter is permitted except that the standard oil cooler may not be modified. All components must be contained within the body of the rear of the firewall.

6.26 Alternate exhaust valves are allowed provided the dimensions and materials are the same as standard (VW) exhaust valves.

6.27 Any oil cooler is allowed. A total of 12 feet of maximum on inch O.D. oil line, unfinned, may be used to hook up the oil cooler and the oil filter. A small section of the fan shroud may be cut away to allow the oil cooler adapter to be mounted on the base pad of the standard oil cooler. Oil coolers must be mounted completely inside a plumb line extending downward from the outermost edge of the bodywork.

6.28 An alternate oil pressure regulator spring may be used when original oil cooler is replaced with an alternate oil cooler.

6.29 Rocker arm waive type spacer washers may be replaced by solid steel type flat washers or suitable thickness.

6.30 Rocker arms may be lightened to a minimum weight of 80.0 grams. Must use only VW parts.
6.31 Valve springs are unrestricted providing:
6.31.1 No more than one spring may be used per valve.
6.31.2 The standard spring cap and retainers must be used.
6.31.3 Spring shall be made of steel.
6.32 Valve covers are unrestricted and may be bolted on.
6.33 Crankshaft pulley is unrestricted.
6.34 Rocker arm shafts may be modified or replaced by those of other manufacture, including shafts that replace the stock clips with a solid center spacer and bolt on end caps/washers.
6.35 The rocker arm shaft assembly may be shimmed out on the cylinder head mounting studs by placing appropriate shims between the cylinder head mounting boss and the blocks on the rocker arm shaft assembly.

7. Transmission – Rear Axle

The transmission/rear axle assembly shall be standard VW sedan, as defined herein. The synchromesh components must be in place and operating on at least three (3) gears. Reverse gear must be operable from the driver's seat. Allowed:

7.1 Installation of any standard VW gear set which can be fitted without modification of any component of the transmission or of the gear set itself and the transposing of the ring gear to provide proper axle rotation.

Fully Synchronized Transmission

Gear	Part No.	No. of Teeth	Ratio
1st	113 311 251A	10:38	3.80
2nd	113 311 261	17:35	2.06
3rd	113 311 275	22:29	1:32
	113 311 275B	23:29	1:26
	113 311 275A	23:28	1:22
4th	113 311 341	27:24	0.89
	211 311 341	28:23	0.82
Ring & Pinion	211 517 143A	8:35	4.375
	311 517 143B	8:33	4.125

Partly Synchronized Transmission

Gear	Part No.	No. of Teeth	Ratio
1st	113 309 251	10:36	3.60
2nd	113 309 261A	17:33	1.94
	113 309 261	17:32	1.88
3rd	113 309 275	23:28	1.22
	113 309 275A	22:27	1.23
4th	113 309 341A	28:23	0.82
Ring & Pinion	113 517 141B	7:31	4.43

Part Numbers: There are different part numbers for various gears in addition to the ones listed here. This in general indicates changes on the parts such as:

Gear	Part No.	Ratio	Difference
4th	113 311 341	0:82	with Key Way
	113 311 341A	0:82	with Splines
Ring & Pinion	113 517 143	4.125	6 mtg. bolts
	311 517 143	4.125	8 mtg. bolts

However, there are no other standard ratios other than the ones listed here. A gear removed out of a transmission can be identified by the number of teeth.

7.2 Alteration of the shock absorber mounts.
7.3 Transmission may not be installed in an inverted position.
7.4 The differential cannot be modified in any way to limit its normal function. Torque biasing, limited slip, and locked differentials are prohibited.

8. Ballasting

Ballasting is permitted.

9. Frame

The frame/chassis shall be constructed of steel tubing of a maximum diameter or width of four (4) inches and be of a safe and suitable design. There may be no frame/chassis rigidity or strength derived by means other than the frame tubes. Stressed skin, monocoque, or semi-monocoque construction is not permitted, except that:

9.1 The firewall panel may be rigidly attached to the frame tubes;

AND

9.2 The undertray (belly pan) from the nose to the rear roll hoop shall not be wider than the bodywork at the bottom of the frame rail when the undertray has an upward turned edge that facilitates mounting the undertray to the chassis or that facilitates mounting the body to the chassis. Engine bay undertrays shall be no wider than the frame rails in this area, or no more than ¼" wider (on each side) than the frame rail when the undertray has an upward turned edge that facilitates mounting the undertray to the chassis or that facilitates mounting the body to the chassis. The undertray(s) between the axle centerlines

shall be rigidly attached to the frame provided the curvature of said tray(s), measured vertically from its lowest point to its highest point at its attachment to the frame rail members at its sides, shall not exceed one (1) inch and have no downward turned edges.

10. Body

10.1 The rear bodywork must enclose the engine by surrounding it from a point no higher than the lower edge of the intake manifold and extending from the front of the engine to its rear on each side. The rear bodywork must have the ability to enclose the original Volkswagen fan shroud mounted in its stock location. The top of the rear bodywork shall extend from the back of the firewall to a point at least 16" to the rear of the centerline of the rear axle. Any bodywork forward of the center of the torsion bar tubes shall have a maximum width of 31.75" (80.645cm).

10.2 No part of the frame or bodywork shall project beyond a plane connecting the vertical centerline of the front and rear tires. Fuel filler necks, caps, or lids shall not protrude beyond the bodywork of the car. The driver's seat shall be capable of being entered without the removal or manipulation of any part or panel. Wings (airfoils) are prohibited. Floor and safety equipment shall conform to the GCR. A firewall to prevent passage of flame and debris between the engine area and driver's compartment shall extend the full width of the cockpit and be at least equal to the top of the carburetor in vertical height. Forward facing air ducts may be installed for the purpose of delivering cooling air directly to the engine, cylinder heads, oil cooler, and/or carburetor, provided the ducted air makes a ninety (90) degree bend within the bodywork. Air duct openings may be located within the cockpit area, and/or penetrate the firewall, provided the duct is baffled or the firewall is extended to prevent flame and debris from reaching the driver. Any shape may be used to form the firewall extension. Any other firewall inlet shall also prohibit passage of flame and debris. (Recommend: that ALL of this extension be the same width as the firewall, allowing for bodywork contour limitations, and extend in a horizontal plane back two (2) inches, minimum, past the carburetor body.)

10.3 The bottom of any bodywork that extends below the frame members shall be on the same flat plane as the undertray (ref. 5.8) and shall not deviate from that flat plane by more than one (1) inch. Effective for any newly registered cars after January 1, 1983.

10.4 Air ducting may be attached to the carburetor and/or the engine.

10.5 The rear locating arm(s), coil spring(s), and shock absorber(s) shall not be faired in and shall be visible from the side without removal or manipulation of any part or panel. Specifically, the front mounting point of the radius rod may be inside the trailing edge of the side body panel so long as the panel does not extend over the locating arm itself.

10.6 The front suspension upright(s) (shock absorber mounts); shock absorbers, and/or trailing arms shall not be faired in by covering or shrouding away from the air-stream. Wings (airfoils) are prohibited.

10.7 Fuel filler necks, caps, or lids shall not protrude beyond the bodywork of the car.

11. Non-Standard Parts

The use of the following non-standard replacement parts is permitted provided that no unauthorized modification of any other component results. Allowed:

11.1 Fasteners (nuts, bolts, screws, etc.)
11.2 Wiring
11.3 Gaskets and seals
11.4 Brake lines and fuel line
11.5 Spark plugs are free
11.6 Piston rings
11.7 Wheel bearings
11.8 Connecting rod bearings and crankshaft main bearings of same type and size as Standard VW
11.9 Brake shoes and brake lining
11.10 Valve guides

12. Battery

The use of any 6 or 12 volt battery and related electrical components are allowed.

13. Front View
Note: Illustrates a fan shroud in its stock location.

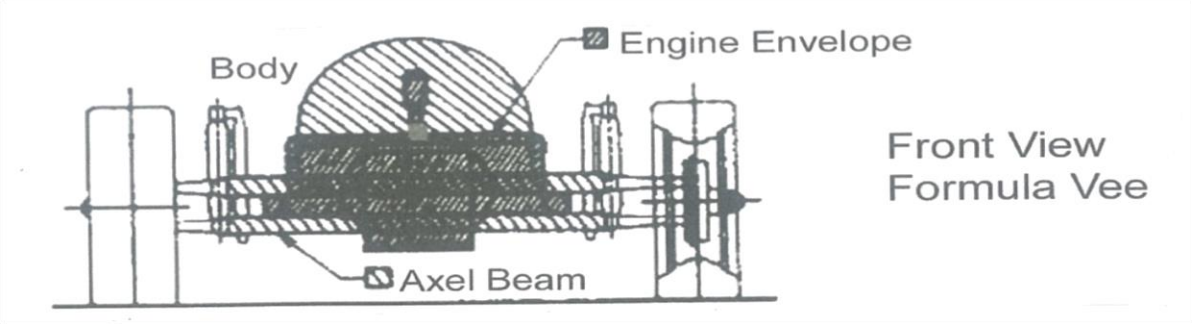

Formula Super V (Air Cooled)

1. Definition

Single-seat, open wheel racing cars based on standard Volkswagen 1600 components. No part of the required engine, drive line, brakes or suspension shall be altered, modified, changed, or be of other than VW manufacture unless specifically authorized herein. It is permitted to lighten, balance, or modify in shape, by tooling, standard VW parts provided it is always possible to identify them positively as such. It is not permitted to add any material or mechanical extensions unless authorized by these rules.

1.1 Weight

1.1.1 Minimum weight, as qualified or raced, with driver, unrefueled:
1600cc engine: 1062 lbs.
1700cc engine: 1090 lbs.

1.1.2 Wheelbase – unrestricted.

1.1.3 Front track – unrestricted.

1.1.4 Wheel track – unrestricted

1.2 Suspension

1.2.1 Front suspension is unrestricted with the exception of the following standard VW-type 1, 2 or 3 parts.

1.2.1.1 Steering knuckles (upright).

1.2.1.2 Wheel hubs.

1.2.1.3 Brake drums, wheel cylinders and backing plates or brake discs and calipers. Splash shields may be removed from disc brakes. ATE caliper-type FV/002 is permitted.

1.2.2 Rear suspension is unrestricted with the exception of the following standard VW type 1, 2 or 3 parts.

1.2.2.1 Axle shafts.

1.2.2.2 "U" joints.

1.2.2.3 Wheel hubs.

1.2.2.4 Brake drums, discs, calipers, wheel cylinders and backing plates. Backing plates may be altered for braking cooling. ATE caliper-type FV/002 also permitted.

1.3 Wheels

1.3.1 Wheels are unrestricted except that:

1.3.1.1 Diameter shall be 13, 14 or 15 inches

1.3.1.2 Rim width shall not exceed six inches front and eight inches rear.

1.3.1.3 The bolt pattern shall enable the wheel to be attached directly to the VW hub without the use of an intermediate adapter.

1.3.1.4 Wheels shall be identical for the right and left front axles, and identical for the right and left rear axles.

1.3.2 Wheel spacers may be installed between the front wheels and hubs, but shall not exceed ½ inch per wheels. Spacers are not permitted between the rear wheels and hubs.

1.3.3 Wheel attachment bolts may be replaced with studs.

1.4 Brakes

1.4.1 Brake lining and/or brake pad material is unrestricted.

1.4.2 Cars must be equipped with a dual braking system. Brake master cylinders are unrestricted.

1.5 Engine

The engine shall be standard VW 1600 from Volkswagen Type 1, 2 or 3 vehicles or a 1600cc 127V (Type 4) industrial engine and shall be installed forward of the transmission. The following modifications are permitted.

1.5.1 Induction system:

1.5.1.1 Maximum number of throats: Four.

1.5.1.2 Maximum throat diameter at the throttle butterfly: 40mm (1.575 inches). 35mm maximum intake venturi size.

1.5.1.3 Fuel injection is prohibited.

1.5.1.4 Turbocharging and/or supercharging are prohibited.

1.5.2 Exhaust system unrestricted, but pipes must terminate behind the driver and extend no more than 28 inches behind the rear axle centerline. The last four inches must be approximately horizontal and not more than 24 inches above the ground.

1.5.3 The fan may be altered or removed. The fan housing may be altered or replaced. Cooling ducts may be altered, removed, or replaced. The cooling fan shall not direct air to the carburetor inlet.

1.5.4 Any standard VW distributor may be used.

1.5.5 Generator/alternator – unrestricted.

1.5.6 Any oil baffles housed within the original sump may be used. Oil capacity may be increased by sump extension of oil filter(s). Dry sump systems are permitted.

1.5.7 The substitution of valve spring retainers and the use of any valve spring(s) of the same type are authorized.

1.5.8 The following standard dimensions of the engine components are included as information and shall be observed:

Bore (maximum)	3.375 inches	(Type 1, 2, 3)
	3.4528 inches	(Type 127V)
Stroke:	2.720 inches + .005 inch	(Type 1, 2, 3)
	2.598 inches + .005 inch	(Type 127V)

Use of pistons and cylinders with a maximum bore size of 90mm, using 66mm stroke – 1679.5cc is permitted, with ballasting.

Intake valve: 1.614 inches maximum diameter.
Exhaust valve 1.339 inches maximum diameter

1.5.9 Camshaft including timing gear – unrestricted.
1.5.10 The use of any standard VW rocker arms.
1.5.11 Any standard VW clutch. Any clutch lining may be used.
1.5.12 Any oil cooler is permitted.
1.5.13 Any push rods.
1.5.14 The use of any alternative pulleys on the crankshaft, fan and/or generator.
1.5.15 The use of alternative valve covers.
1.5.16 The addition of dowel pins between the flywheel and crankshaft.
1.5.17 Bushings may be installed where none are fitted as standard, provided they are concentric and that the centerline of the bushed part is not changed.
1.5.18 Pistons and cylinders may be replaced with that of other manufacture, provided said is of the same material, is dimensionally identical, and meets all other tolerances and specifications.
1.5.19 Alternative connecting rods are allowed providing they are of the same material as original rods and original geometry; crank pin to wrist dimension is maintained.

1.6 Transmission – Final Drive

Any transmission/final drive assembly using a VW type 1, 2, or 3 case with four (4) forward speeds and an operational reverse gear may be used. The case may not be installed in an inverted position. Reverse gear must be operable from the driver's seat.
The final drive/differential unit is unrestricted except that limited slip and locked differentials are prohibited. The rear carrier and gear shift housing may be modified or replaced to permit the installation of a "quick-change" gear cluster assembly.
The final drive covers (side plates) may be modified or replaced.

1.7 Body

1.7.1 No part of the bodywork and aerodynamic devices shall exceed in height a horizontal plane 90cm (35.4 inches) above the ground. The safety roll bar/roll cage and the engine air box are not included in this height restriction. Measurements are to be made in any condition, driver on board.
1.7.2 The cockpit opening must have the following minimum dimensions:
1.7.2.1 Length: 60cm (23.6 inches)
1.7.2.2 Width: 45cm (17.7 inches)
This width must extend over a length of 30cm (11.8 inches) measured forward from the rearmost point of the seat back.
1.7.2.3 The driver's seat must be capable of being entered or evacuated without the removal or manipulation of any part or panel.
1.7.3 Body work ahead of the front wheels and lower than the top of the front wheel rim shall not exceed a maximum width of 135cm (53.15 inches).
1.7.4 Body work ahead of the front wheels and higher than the top of the front wheel rim shall not exceed a maximum width of 110cm (43.307 inches).
1.7.5 Body work behind the front wheels shall not extend beyond a plane connecting the vertical centerline of the front and rear tires.
1.7.6 The material and shape of the bodywork are unrestricted, provided the body is symmetrical to the longitudinal axis of the vehicle and covers the entire length of the engine. The body shall not protrude beyond the rear-most point of the gearshift linkage. The carburetor(s) may project outside of the bodywork.
1.7.7 Canards, dive planes, and "sports car noses" are permitted with the dimensional restrictions of Sections 7.3 and 7.4.
1.7.8 Rear-mounted wings are permitted.
1.7.8.1 Height: No part of the wing shall exceed in height a horizontal plane, 90cm (35.4 inches) above the ground.
1.7.8.2 Width: The maximum width (as viewed from the front of the car) shall not exceed 95cm (37.402).
1.7.8.3 Setback: No part of the wing may extend rearward more than 80cm (31.5 inches) from the rear wheel hub centerline.
1.7.8.4 Area: Plan area shall not exceed one-half square meter (as viewed from above).
1.7.8.5 Must be firmly fixed and symmetrically mounted on the fully sprung structure of the car.

1.8 Fuel

Fuel cells must be MCSCC approved safety fuel cell(s). The total capacity shall not exceed 10 U.S. gallons. Fuel cells shall be separated from the engine compartment by the firewall and located to the rear of the front wheels centerline.

1.9 Non-Standard VW Parts

The use of the following non-standard VW parts is permitted: Fasteners (nuts, bolts, screws, etc.), Wiring, Gaskets and seals, Brake and fuel lines, Spark Plugs, Piston rings, Wheel bearings, Rod and main bearings of the same type, Fan belt, Brake shoes, pads, and linings, Valve (standard valve head diameter must be maintained), Valve guides, Valve seats, Springs, Battery, Coil, Fuel pump, Oil pump(s), Ignition point set, Oil and lubricants.

Formula 5 (F5, formerly F500/F440)

1. Definition

1.1 A class for single-seat, open-wheel, rigid-suspension race cars using either a snowmobile derived engine and drive components or a 600cc motorcycle engine. Specifications are restrictive in nature in order to emphasize driver ability rather than design.

1.2 Formula 5 is a Restricted class. Therefore, any allowable modifications, changes, or additions are as stated herein. There are no exceptions. **IF IN DOUBT, DON'T**.

2. Weight and Dimensions

2.1

Wheelbase:	Maximum 80"
Overall Length:	Minimum 110" Maximum 150"
Overall Width:	Minimum 50" Maximum 55"
Weight:	See specification tables at end of this section

3. Suspension

3.1 Suspension shall be restricted and of a safe, suitable design. "Restricted" is defined as follows.

3.1.1 There shall be no springs or shock absorbers action either directly or indirectly between the frame/chassis and axle.

3.1.2 Rear driving axle shall be of solid or tubular steel or aluminum. Axle shall be one piece live axle, driving both rear wheels. Trailing arms are allowed. Differentials and/or slip joints are not permitted. The object of 3.1.2 is to eliminate independent rear suspension of any type, or provision for lateral movement of the axle shall to facilitate independent-type suspension.

3.1.3 Blocks, bushings, and/or mounts of rubber or similar material shall be used to isolate engine and drive assemblies, and/or axles from vibration, shock, or track irregularities. The number of mounts shall not exceed one (1) per wheel and shall not exceed one (1) inch in thickness in uncompressed state nor shall they be stacked. The diameter of the mounts shall not exceed (2) times their thickness. The mounts shall carry the weight of the car. Installation will be evaluated on compliance with both the letter and the intent of this provision.

3.1.4 Front axle(s) design and/or mounting configuration shall be such that the axle(s) does not function as a torsion bar. Split-axle/independent front suspension is permitted so long as suspension control is affected solely by the mounting define herein.

3.1.5 Anti-sway bars are not permitted.

4. Brakes

4.1 Brakes shall be foot-pedal operated, hydraulic disc or drum-type, acting on all four wheels. The brakes shall be a dual system, arranged in a manner to provide braking or at least two (2) wheels in the event of failure in part of the system.

5. Steering

5.1 Steering is unrestricted provided it is of a safe and suitable design.

6. Transmission and Final Drive

6.1 Only rear wheel drive is permitted.

6.2 Snowmobile Engines

Transmission of power from the engine to the rear wheels shall be through an automatic torque converter-type, centrifugal variable ratio drive, using a belt and/or drive chain and centrifugal clutch. Sprocket and/or pulley diameters may be changed to alter the drive ratio. No electronically or driver-controlled variable drive is permitted.

6.3 Motorcycle Engines

6.3.1 The final drive ratio is unrestricted. Internal transmission gears shall remain stock.

6.3.2 Engines must use the sequentially shifted motorcycle transmission as supplied with the engine. Reverse gear is not required.

6.3.3 All gear changes must be initiated and made by the driver. Only mechanical gear shifting mechanisms are permitted. This may include cables, rods, or other mechanical linkage systems. All other shifting mechanisms are not permitted. This prohibition shall include electric solenoid shifters, air-shifters, etc. Devices that allow pre-selected gear changes are also prohibited. Devices that interact with the throttle, ignition, or fuel system during a shift operation (for example: ignitions cuts, flat shifters, blippers) are permitted, but no such devices shall remove the driver's control of the gear change initiation, gear selection or completion.

6.3.4 The clutch assembly is unrestricted except that the clutch engagement system shall be operated solely by driver input and may be mechanical or hydraulic in nature. The driver's hands or feet must manually operate the clutch and there shall be no operation of the clutch by any assisted method. There shall be no modifications to the engine/transmission to enable the use of replacement clutch components or assemblies.

7. Frame/Chassis

7.1 The frame/chassis assembly shall be constructed of steel tubing, and shall be of a safe and suitable design. The monocoque-type chassis is permitted but shall have reinforcement plates at all points of attachment for axles, engine, drive components, roll cage, and river restraint system. There shall be a bulkhead incorporated in the chassis forward of the soles of the driver's feet with the pedals depressed. Forward-facing braces protection the driver's legs and feet shall extend from the front roll hoop to the front bulkhead.

7.2 The soles of the driver's feet shall not extend beyond the front edge of the wheel rims (in normal position; i.e., pedal not depressed).

7.3 All cars registered prior to January 1, 1990 shall comply with the above or provide foot protection in the following manner.

7.3.1 There shall be a crushable structure, securely attached to the front bulkhead, with a minimum cross section of 200 square cm (31 square inches), a minimum of 40cm (15.75 inches) forward of the brake pedal (not depressed) constructed of a minimum of eighteen (18) gauge 6061-T4 or equivalent aluminum. Radiators may be incorporated in this structure.

8. Roll Cage

8.1 Cars shall have a full roll cage of steel, designed so that when viewed from overhead, an opening, having a minimum width of fourteen (14) inches and a minimum length of seventeen (17) inches is available for driver extraction under emergency conditions. Cars shall have roll cages which comply with ***Appendix Z***.

9. Bodywork

9.1 All mechanical components of the car, forward of the roll cage, shall be covered by suitable bodywork. Exceptions are the wheels, brakes, front suspension components, and the cockpit. Driver's seat shall be capable of being entered without the removal or manipulation of any part or panel. Sports car noses are recommended provided they do not extend beyond the outside edge of the front tires, do not stand taller than the top of the front tires, and their rear-ward most portion does not extend beyond an imaginary line drawn from the center of the front wheel, forty (40) degrees forward from vertical.

9.2 Bodywork behind the front wheels and forward of the rear wheels shall extend to within one (1) inch of a line connecting the outer edges of the front and rear wheels. In a horizontal plane it shall begin within two (2) inches (+ ½ inch) of the turned position of the front tire and extend to within four (4) inches (+ ½ inch) of the rear tire. The side pod(s) shall be continuous from the outside edge of the main bodywork, at a minimum height of nine(9) inches, maximum twelve (12) inches measured from the bottom plane of the car. The side pod(s) shall be closed across the front except for air duct openings to heat exchanger(s), but ALL ducted air shall pass through those exchanger(s). The side pod(s) may be open to the rear. Side pod(s) is (are) intended to restrict wheel entanglement between cars. The purpose of these rules is to eliminate the use of "ground effects" to achieve aerodynamic down-force on the vehicle. Thus, for full width of the body between the front and rear axles, the lower surface (surface licked by the air stream) shall not exceed 2.54cm (1 inch) deviation from the horizontal in any longitudinal section through that surface. (This is not to be interpreted as requiring a floor pan beneath the motor or rear axle). The bodywork shall not extend below the surface of the tub or chassis floor to the rear of the front axle. Seat bucket or other protrusions shall not circumvent this rule. It is not permitted to duct air through any part of the bodywork for the purpose of providing aerodynamic down force o the car. Wings are prohibited.

10. Tires

10.1 Any recognized ten (10) inch racing tire with any tread width up to a designed 7.5 inch width may be used. Any HR rated radial tire may be used as a rain tire.

11. Wheels

11.1 Wheels shall not exceed a ten (10) inch diameter and 8.5 inch width.

12. Ballast

12.1 Ballast may be added to meet the minimum weight requirement provided it is securely mounted within the bodywork and serves no other purpose. It is recommended that underweight cars be brought to the minimum limit by adding strengthening material to areas providing driver protection: i.e., roll cages, frame rails, etc., rather than simply bolting in additional weight.

13. Fuel Tank

13.1 The fuel container shall comply with ***Appendix X***, located within the bodywork, ahead of the rear wheels and behind the centerline of the front wheels. Monza/flip-top caps are prohibited.

14. Fire Extinguisher

14.1 System types, capacities, and mounting requirements shall be in compliance with ***Automobiles – General Regulations***.

15. Engines

15.1 Snowmobile Engines

15.1.1 Engines shall be two-cylinder, two-cycle, water-cooled in stock configuration as listed below: Fuju "Chaparral" Model G44bw, Kawasaki TC440A/C-200, B-201, C201, C-202, F-202 and G-203. The F-202 and the G-203 are electric start engines. Cylinder head P/N 440/2A is permitted for the engines listed. Only the "A" series engine is legal; the use of any parts from other Kawasaki series engines is prohibited. Rotax Model 494 and 493, single expansion chamber and electric and/or pull starter, and Rotax 494 RAVE engine must use the 494 non-RAVE rotor. RAVE valves may be blocked in the "full open" position or left as delivered. 494 RAVE and non-RAVE cylinder heads may not be interchanged between engines. Rotax 593 in a carbureted, non-HO or HO version; must run inlet tract restrictors, one in each tract immediately after the carburetor; single expansion chamber; electric and/or pull starter.

15.1.1.1 The AMW engine approved for F500 shall be the AMW model no. 250-2RC2, two-cylinder, two cycle, liquid cooled, reed valve engine with a nominal bore and stroke of 72mm x 61mm and a displacement of 497cc. All components of the engine shall be in "as cast" condition or as delivered from AMW. No component of the engine may be altered, modified, or changed nor be of any other origin than the original equipment manufacturer (OEM) unless specifically authorized in these rules. AMW engine specifications will not be changed for three (3) years (1995-1997). Hardware items (nuts, bolts, etc.) may be replaced with similar items performing the same fastening function(s).

15.1.2 No components of approved engines may be altered, modified, or charged, nor be of any other than original equipment manufacturer unless specifically authorized. Engine components shall be assembled in stock configuration. Stock configuration is defined as including thermostat, water outlet elbow, ignition harness, etc.

15.1.3 Authorized Changes:

15.1.3.1 Carburetors: The induction system is restricted to two (2) 38mm Mikuni VM round slid carburetors (except AMW). No modifications are permitted to the carburetor bodies. The use of any jets or needles is permitted.

15.1.3.2 Carburetor mounting shall be of individual runners, no balance pipes, no plenums. Restrictor plates are no longer required. Supercharging, turbocharging, and direct fuel injection are prohibited.

15.1.3.3 Any exhaust pipe(s) may be used (unless otherwise specified), provided they meet all event specific sound requirements. Maximum exhaust length behind the rear axle centerline is twenty-four (24) inches. It is the intent of this rule that the exhaust pipe includes the exhaust manifold.

15.1.3.4 Alternate piston replacement for Chaparral engine only, “Wiseco” one-ring piston.

15.1.3.5 Any thermostat may be used. Any Rotax 494, 493, or 593, respectively, model thermostat housing or water outlet elbow may be used. The water bypass may be blocked. Either upper or lower cylinder head water outlet may be blocked in any safe manner to facilitate use of a single water outlet.

15.1.3.6 Kawasaki and Rotax 494/493 engines: “OEM Type” replacement pistons of cast aluminum construction permitted. Must match OEM design, specifications, and compression ratio. OEM 0.010” overbore piston allowed.

15.2 Motorcycle Engines

15.2.1 Mass produced water-cooled, 4 cylinder, 4-cycle motorcycle engines up to 600cc are allowed as listed in table 1 at end of this section.

15.2.2 All engines must use individual inlet restrictors (IIRs) as listed in table 1 at the end of this section. The IIRs shall be placed between each cylinder throttle body and its corresponding inlet port. The restrictor shall be made from flat steel or aluminum sheet at least 0.060 inches thick. The hole through which all air to the engine must pass shall be round, centered with respect to the throttle body bore or carburetor bore or intake manifold bore to which it is attached; no radiusing, chamfering or beveling of the hole is permitted..

15.2.3 All engine internals and compression ratio must remain stock. The competitor must present, on demand, an original factory manual for the engine to allow compliance verification. There shall be no modifications of any component of the engine unless specifically authorized in these rules.

15.2.4 The stock ECU shall be used. The ECU fuel and ignition map may be changed. Devices that modify inputs to or outputs from the ECU (e.g., Power Commander) may be used. Stand-alone aftermarket ECUs are not permitted.

15.2.5 Mechanical throttle mechanisms must be used on all engines. Computer, electronic or pneumatic control of the throttle position is not permitted.

15.2.6 Turbochargers and superchargers are prohibited.

15.2.7 Carburetion or fuel injection may be used. Fuel injection, if used, must be stock and unmodified for the model and year of the engine that is used.

15.2.8 The exhaust system and exhaust manifold are unrestricted, provided they meet all event specific sound requirements, except that stepped exhaust headers are not allowed.

15.2.9 The lubrication system is unrestricted. Any oil pan and/or baffling are permitted. The use of dry sumps is permitted. Accusumps or similar oiling assist systems are permitted.

15.2.10 Oil coolers are unrestricted.

15.2.11 The cooling system is unrestricted.

15.2.12 Replacement of the stock camshaft chain tensioner with any other chain tensioner is permitted. The replacement chain tensioner must attach directly to the engine in the original chain tensioner position. There shall be no modifications to the engine to enable the use of the replacement chain tensioner.

15.2.13 Replacement of the standard connecting rod fasteners with alternate fasteners is permitted as long as there are no modifications to the production connecting rods. Replacement of other nuts, bolts, fasteners, and washers with common hardware items performing only the same fastening/fitting functions also is permitted as long as there are no modifications to the production parts being assembled or to the production assembly

15.2.14 The engine head gasket must be the thickness of the OEM gasket for the year and model of the engine.

15.2.15 Camshafts and camshaft drive mechanisms may not be modified or adjusted in any way unless specifically authorized in these rules.

15.2.16 Self-starter: Cars shall be equipped with an on-board self-starter and an on-board power supply controlled by the driver while in a normal driving position.

15.2.17 The engine must be installed in the chassis so that the exhaust ports face the front of the car. The engine may be inclined from vertical.

16. Chain/Belt Guards

16.1 Protective guards made from 1/8” aluminum of 3/32” steel are required where belt or chain breakage could result in injury to the driver or damage to items necessary for the safe operation of the vehicle. This includes, but is not limited to, fuel line, fuel tanks, brake lines, radiator, and water hoses.

17. Radiator

17.1 Capacity, size, shape, location, and number are unrestricted. Overhead radiators shall be at least six (6) inches rearward of driver’s head.

18. Fuel

18.1 Fuel shall meet the requirements specified in ***Automobile – General Regulations***, Section ***2***.

19. Safety Items

19.1 In addition to previously mentioned items, the following equipment is required. Vehicle will be fitted with:

19.1.1 A Firewall which effectively protects the driver. (Refer to ***Automobile – General Regulations***, Section ***9.3.16***).

19.1.2 A complete driver restraint system including shoulder straps, lap belt, and submarine strap(s). (Refer to ***Automobiles – General Regulations***).

19.1.3 Mirrors affording the driver clear fields of vision behind him/her, and on both sides of the car.

19.1.4 Cars using CVTs shall not be started with rear wheels on the ground unless a driver is on board.

20. Car Specification Tables

Engine	Weight (lbs)	Inlet Restrictor
Honda CRB600RR (03-13)	875 lbs	31 mm
Suzuki GSXR600 (03-13)	875 lbs	31 mm
Yamaha R6 (03-13)	875 lbs	31 mm
AWM (model no. 250-2RC2)	800 lbs	
Rotax 593 non-HO	850 lbs	MA0242SP1020A or MA0242SP1063A
Rotax 593 HO	875 lbs	MA0242SP1020A or MA0242SP1063A
Rotax 494	800 lbs	
Rotax 493	825 lbs	
Fuju “Chaparral”	700 lbs	
Kawasaki TC440	700 lbs	

Formula Indy

1. GCR

All automobiles must comply with ***Automobiles – General Regulations.***

2. Engine Specifications

2.1 Class PRO+A- One (1) 1975 through current year, liquid cooled 2 cycle snowmobile engine, with a maximum overbore of .060" or a maximum displacement of 609cc whichever is smaller. The Rotax 521 engine with 583-conversion kit is allowed. One (1) 4 cycle motorcycle engine 750cc with .060" overbore permitted, or one (1) free air or fan cooled snowmobile engine, maximum 609cc. ENGINES – Manufactured standard and readily available. Self-starting, recoil or electric start mandatory. Push start allowed only with Board approval. All motorcycle engines must retain and use the stock transmission and stock style clutch. No prototype or experimental engines allowed. The Yamalaris Triple and Decker Triple are considered to be prototype engines.

2.2 CLASS PRO-AM One (1) Chaparral liquid cooled snowmobile engine, maximum 440cc (Rupp crankcase and crank shaft allowed as replacement for Chaparral), one(1) 440cc free air or fan cooled engine; one (1) 440cc liquid cooled Kioritz (Model KEC440LC); one (1) stock Arctic Cat 440cc liquid cooled engine with no internal modifications (Model AF44L); one (1) 440cc Polaris piston port engine; one (1) 440cc liquid cooled Kawasaki Invader (TC44A) (not the LTD model); one (1) 440cc liquid cooled John Deere Liquefier (TA440B); ONE (1) 440CC Polaris (EC45-PL-O1 or EC45-PL-02) (No XCR Special allowed); One (1) 440cc Arctic Cat Prowler or Cougar (AJ44L3) (ZR Model AN44L1 not allowed); or one (1) 550cc 2 cylinder, 4 cycle, 2 valve per cylinder motorcycle engine, carbureted only. Stock throttle bore. No rotary valve motors allowed in Pro-am Class. Maximum over bore of .060" for all listed Pro-Am Motors. The AMW 500 engine in stock condition as supplied by AMW for F500 racing with no exceptions. One (1) Pro or Pro-Am engine allowed.

3. Mechanical & General Specifications Pro & Pro-Am

3.1 Suitability For Competition- The basic design of the car must be suitable for racing with particular emphasis on safety. All FIRA rules, especially safety rules, must be met by all cars at all times. Cars not complying with the rules will not be allowed to compete NOTE: There will be no grace period granted to any car that allows it to compete without meeting FIRA rules that govern safety or car performance.

3.2 Wheel Base- Minimum 64" to 86" maximum axle center to center.

3.3 Width- Must not exceed 64" overall, measured from sidewall to sidewall. No part of the car may protrude beyond the widest part of the tires or wheels.

3.4 Appearance- All cars must be neat, clean and painted. The Board of Directors has the right to disqualify (by majority vote) any car that does not present a suitable appearance. All cars must have the Indy, Formula or Super modified styling. No midget mini-sprint or spring car design tail pieces allowed.

3.5 Body- Full body with open wheels. All body parts will be intact and securely mounted to the frame. No part of the body may cover the top of the tires. The lower part of the driver's body must be enclosed at all times that the car is operated on the track. Top and sides of side pods should be fully enclosed and are mandatory. The back of the pod must be at least one-half the width or more of the rear tires.

3.6 Weight - 750lbs car and driver minimum after a race. If additional weight is required, all ballast must be solid and permanently attached to the car. Total ballast weight cannot exceed 30lbs. All ballast must be painted white and clearly identified with the car number.

3.7 Wings- Rear wings or panels will be used for the car number and shall not be mounted directly over the top of the roll cage. Both side panels or wing are to be of same width and height dimensions and both side panels must be equal distance from the ground. The rear wing including the side panels must be no higher than the roll cage. Wings cannot be attached to the main roll cage. The leading edge of the wing cannot be further forward than the leading edge of the rear tire. The cord of the wing cannot exceed 32" front to rear. Vertical side fences or vertical wings cannot be used unless they are a part of a horizontal wing system. Wing width shall not exceed the width of the car including the tires. The rear wing cannot extend more than 34'' beyond the rear of the rear tires. Front wing end plates, if used, must be flexible plastic or rubber only so as not to be a danger to other competitors.

3.8 Car Identification – All cars must have a minimum 10" high number/s on both sides of rear wing panel and a minimum 8" high number/s on top front (hood) of car. Rear wing side panels must be painted and cannot be bare metal. Numbers must be painted in contrasting colors. Scorer's requests to revise the color or style of numbers to improve readability will be honored. No prism tape or three digit numbers allowed. Each car must be marked Pro or Pro-Am in 3" letters anywhere on the side of the car visible to the crown. All Pro-Am cars must have a contrasting colored stripe on the rear bumper.

3.9 Suspension – any design suitable for racing speeds and stresses. The total cost for on car set or spring units and shock absorbers must not exceed $800. No independent rear suspensions allowed. All fasteners that attach suspension components to the frame, spindle or axle must be safety wired, cotter keyed, or pinned to prevent unintentional loosening. The Technical Inspector can disqualify any suspension deemed unsafe.

3.10 Rear Axle- One 1-1/4" minimum diameter solid axle allowed, Or, 1" diameter axle will be allowed if supported by 4 bearings, on within 1" of the right and left rear hubs. A 1 ¾ or 2" Splined Tubular Aluminum Rear Axle Manufactured by Hyper Racing http://www.hyperracing.com/ and is the only aluminum or tubular axle allowed. Use of the Compatible wheel hub by Hyper Racing must be used with these axles.

3.11 Axle And Spindle Nuts- Both front and rear must be safety wired or cotter keyed.

3.12 Hubs – Rear hubs made of steel must be reinforced with gussets. Rear hubs of aluminum must be of one-piece construction equivalent to Micro-Belmont design.

3.13 Wheels- Designed for racing and void of any defects. Two (2) valve stem holes may be used on 5X5 offset wheels to allow wheel to be reversed. NO holes other than manufactured are allowed. Maximum width to be 10" with a diameter of either 10" or 13". No steel ATV type wheels allowed. No modifications to existing wheels to increase width.

3.14 **Tires**- Racing type, Hoosier type tire 10" or 13", compound to be LC3 or harder. Must be in good condition without any visible flaws. No cutting sides of tread. Maximum tire width to be 10" manufacturer spec.

3.15 **Tire Compound**- As indicated on tire sidewall to be that designated by the manufacturer as Hoosier type tire LC3 or harder.

3.16 **Brakes**- Four wheel brakes are mandatory. Live rear axle will require a minimum of one 9" diameter, 3/16" thick brake disc. Rear caliper cannot be mounted on a chain sprocket. Separate brake fluid systems for front and rear. Two master cylinders or one with dual reservoirs so that front is independent of the rear. All brakes must be operated by a single pedal. Flexible lines must be steel braided brake hose and attached to steel lines with double flare or ISO flare fittings. All hydraulic connections must be secure and leak free. Any brake system deemed inadequate by the tech or race director will not be allowed to compete.

3.17 **Drive Train**- Must be Chain or Cog belt drive to axle. Chain Oilers are Not allowed.

3.18 **Throttle**- Car are to be equipped with foot operated throttles. Throttle must have a spring, which will close throttle when released.

3.19 **Throttle And Brake Mounting** – Pedals are to be securely mounted to the frame. Pedals cannot be mounted to the belly of the car.

3.20 **Kill Switches** – Two electrical switches are required in good working condition. One in the driver's compartment within easy reach of the driver and one near the top right hand side of the roll cage. Both switches should be wired so that they will be off in the down position and clearly labeled.

3.21 **Running Light** – All cars shall have one rear red light illuminated at all times when the car is on the track and running. The light should be similar in size, shape, and light output as that of a typical trailer clearance light.

3.22 **Roll Cage**- Will be a minimum of 1-1/4" (1.250) O.D. seamless mild steel tubing with a wall thickness of .095 and minimum bend radius of 4-1/2". All roll cage welded joints will have a gusset or strengthening plate welded in place, the gusset will be a minimum of 13 ga. (.0897) or a rolled double plate of 19 gauge (.0418) mild steel, it with extend 2" down both legs of the cage joint as measured from the inside edge of the tubing joint and all exposed edges with be protected so as not to be a hazard to the driver. Roll cage must consist of a 4 point cage with a top hoop. Cage should enclose drier in case of rollover. The driver's head with the helmet on must be a minimum of 2" below the line drawn across the roll cage from front to rear and side to side. No driver will be allowed on the track if this rule is in violation! Cage is to be open at top to remove driver in case of emergency. Driver is to be able to see 90 degrees on both sides. No holes are to be drilled in upright bars except for mounting holes to secure cage chassis. No brazing is allowed. A 3/16" hole may be drilled by the Tech Inspectors only in the top crossbar. Rollover protection must be provided above the leg area. Roll bars must have bracing to the lower frame. All welds must be exposed and visible at all tunes. No padding or tape can be used on the welds. Driver's arms must be restrained inside the roll cage. A roll cage designed like a top fuel dragster may be allowed. Must have enough room to remove driver through the front opening, and must be made of same material and specs as per existing rules. Before roll cage can be used, detailed plans must be submitted to the Board of Directors and Tech Inspector for approval.

3.23 **Side Entry Bars**- to be made of 1" OD .095 wall mild steel tubing and to be installed horizontally on the right and left side of the roll cage at a height that will aid in protecting driver from another car of loose road wheel, but will still allow driver to exit from cockpit.

3.24 **Frame**- Of safe design, Void of any defects, which would impair the safety of the vehicle. Particular attention should be give to all welds. All sharp edges in the leg compartment should be padded. Padding is mandatory in the helmet area on the roll cage. No padding or tape can be used on any welds.

3.25 **Clutch Guard**- The clutch guard cover must cover clutches front and rear and side facing the driver. Guard must cover down to the lowest axle shaft of the two clutches and the full width of the clutches, not including the bolt to secure clutches on the axle shafts of crankshaft. The guard must be of solid material and a minimum of 3/32" thick steel or 3/16" thick aluminum with no holes (other than mounting holes) in the minimum protected area.

3.26 **Coolant**- Water only. No antifreeze allowed.

3.27 **Mirrors** – mirrors are optional, right of left, or both sides, maximum diameter 6". Mirrors must be securely mounted to frame member. One "wink" style mirror mounted as a unit to the inside of the roll cage can be used in place of outside mirrors. Any mirror must not interfere with driver safety or vision.

3.28 **Seat Belts And Shoulder Harness**- Driver restraints systems will be of racing design and will consist of 3" seat belts & shoulder harness, a submarine strap and arm restraints and will incorporate a quick release buckle. They will have no visible flaws (i.e. burns etc.) and will not be more than four (4) years old, and have a date stamp affixed. The year of manufacture (regardless of month/day) will be the date used for validation. They will be installed per illustrations and will use no less than grade #5 bolts. The use of an approved seat belt harness is mandatory.

3.29 **Seat Belts**

--Metal to metal quick release buckle and
--belt material to be as short as possible
--belt must be worn as tight as possible
--belt should be run across the pelvic area, not the stomach.
--crotch belt mandatory
--arm restraints mandatory

3.30 **Exhaust System**- Which protrude the outer limits of the car body will have a 2" diameter washer welded to the end of the stinger or mufflers. Exhaust noise will be measured 100' from the start/finish line and will not exceed 90 DBA. Mufflers shall be packed at all times. If a car is found in violation it will be disqualified until repairs are made.

3.31 **Fuel Tank**- 5 gallon maximum. Any tank over 3 gallons must have a bladder, must not impair operation of the car or exceed the length or width of the racecar. All tanks must be securely affixed to the car. All tanks must have a safety catch, which will keep the cap from opening of coming off in the event of an accident. No pressurized fuel systems are allowed. No nitrogen substances or additives allowed. All fuel thanks must be mounted so that they are protected from other cars. No fuel tank can be mounted in the driver's compartment.

3.32 **Carburetion**- Carburetors, or if engine used was originally equipped from the factory with OEM fuel injection it will be allowed using the factory ECM in OEM configuration. NOTE, Not Allowed are, After market modifications to OEM injection, Non-OEM injection, Yamaha Circle M carbs, Turbo or Super Charging or the Retrofitting of older engines.

3.33 **Fuel Lines**- Must be safety wired or clamped at all connections.

3.34 **Gasoline**- Gasoline used must be produced by a recognized commercial manufacturer. Gasoline as defined is a mixture of hydrocarbons. The use of gasoline which contains compounds bearing nitrogen and/or oxygen is prohibited. The specific gravity of the gasoline as used must be within .720 to .750 range at 60 degrees F. (API gravity range of 65 to 57 at 60 degrees F.) most gasoline will meet this criteria; however, it is advisable to have known gas checked before competing. The dielectric constant (DC) of the gasoline must not exceed 2.3 (the addition of compounds containing nitrogen and/or oxygen will produce a mixture with DC greater than 2.3). Gasoline is a good electrical insulator, or dialectic, and its relative effectiveness as an insulator is represented by its DC. The average DC for the hydrocarbons which comprise gasoline is 2.025. This is defined as a reading of 0 with the FIRA fuel check meter. To compensate for possible temperature differences of competitors' gasoline which cause slight variations of the DC, the acceptable range of the meter reading is plus 5 to minus 5, with 0 as the reference reading. A gasoline which has a DC greater than 2.3 will cause the meter reading to be outside of this range. Gasoline will be checked by the Tech. Inspector with a Digatron DT-15 per instructions provided by Digatron.

3.35 **Steering** – Shall be of a suitable design, in proper working order and adjusted for maximum safety. All steering bolts, nuts and axle nuts must be tightened and safety wired or cotter keyed.

3.36 All bolts used in a stress area such as steering or suspension must be of Grade #5 as a minimum. Chain, cable or belt linkage is prohibited.

3.37 **Bumpers** – No roller bumpers or exposed front bumpers are allowed. Rear bumpers are mandatory and will be of sufficient strength to raise the car off the ground with the driver on board. Bumper must not be designed to be a hazard to other competitors. All rear bumpers will be hoop bumpers and must extend to within on half the width of the rear tire as a minimum. The top of the rear bumper should be no lower than the centerline of the rear axle height or no higher than the top of the rear tires. Cars with a main frame width at the extreme front of less than 10" must be raced with front wings in place. The bare wing bar or the nose without wings are not acceptable configurations for cars with these narrow noses.

3.38 **Catch Can** – All cars with a radiator must have at least a 1-pint capacity container with an overflow tube to be securely fastened to cap and radiator. Container must be vented.

3.39 **Wheel Weights** - Clip-on weights are not allowed. Duct tape is to be place over all wheel weights.

3.40 **Batteries** – Batteries are to be mounted in a secure and protected battery box, away from the fuel cap filler area, and properly vented. Terminals must be covered against accidental sparking. FIRA recommend the use of "GEL CELL" or a totally sealed type battery that will not leak under any circumstances.

Sports-Racing Categories

ASR, CSR, DSR

1. Purpose

The MCSCC Sports Racing Category shall be for automobiles, which are designed and constructed for road racing competition, offering provisions for driver and passenger, basically suitable for driver over normal roads. They shall conform to the following requirements: Sports racing category cars built prior to January 1, 1966 need not comply with the minimum cockpit width dimensions specified herein, but must comply with all other requirements. Single-seat sports racing cars meeting SCCA requirements and limitations may compete in MC classes.

2. Classification

Cars with reciprocating piston engines of two or four cycle designs shall be classified according to engine displacements as follows:

2.1 ASR – over 1600cc with 2 valves per cylinder, over 1300cc with 4 valves per cylinder, maximum 2400cc. maximum as raced weight 1811 pounds

2.2 CSR – over DSR limits, and below or equal to 1615cc. Maximum 2 valves per cylinder over 1300cc.

2.3 CSR weights (per FIA Group CN specs. all SCCA cars in accordance with SCCA schedule)

Displacement	**induction**	**weight**
750 cc	Turbo or supercharged	1200
1200 2cycle	normally aspirated	1100
1350 2cycle	normally aspirated	1200
1355 bike power	normally aspirated	1025
1455 bike power	normally aspirated	1075
1615 bike power	normally aspirated	1125
1615 4cycle, 2 valve	normally aspirated	1100
2135 4cycle, 2 valve	normally aspirated	1200
1615 4cycle, 4 valve	normally aspirated	1300
2000 4cycle, 4 cylinder 4 valve	normally aspirated	1350

2.4 DSR

Up to 850cc:	two stroke/cycle.
Up to 1000cc:	four stroke/cycle; rotary piston of equivalent displacement.
Up to 1025cc:	four stroke/cycle max. 2 valves per cylinder.
Up to 1300cc:	automotive base four stroke/cycle maximum 2 valves per cylinder.

DSR engines over 1025cc may be modified to current MC GT rules, except that cylinder bore and crankshaft stroke are free providing resulting displacement does not exceed above limits. All engines are restricted to a maximum of 4 cylinders and use of carburetor(s) only. Supplementary regulations for an event or series of events may provide combining any of these classes. Supercharged cars shall be classified according to their displacement times a factor of 1.4. Rotary Piston Engines: Cars with rotary piston engines covered by the NSU-Wankel patents shall be classified on the basis of a piston displacement equivalent of twice the volume determined by the difference between the maximum and minimum capacity of the working chamber. Minimum weight is 900 lbs. with the driver for belt or chain drive all other drives 1000 lbs.

3. Self Starter

Cars shall be equipped with an automatic self starter and on-board power supply.

4. Brakes

These cars shall be equipped with a dual braking system operated by a single control. In case of a leak or failure at any point in the system, effective braking power shall be maintained on at least two wheels. A separate hand brake (emergency brake) is not required.

5. Coachwork

Coachwork shall provide comfort and safety for driver and a passenger. All elements of the coachwork shall be completely and neatly designed and finished, with no temporary or makeshift elements. The body shall cover all mechanical components, except that the intake and exhaust pipes may protrude. Any specific part of the car which has an aerodynamic influence on the stability of the vehicle must be mounted on the entirely sprung part of the car and shall be firmly fixed while the car is in motion. No aerodynamic device (e.g., skirts, bodysides, etc.) may extend below the lower surface anywhere on the car to the rear of the front axle. The highest point of any forward facing gap in the coachwork shall not be situated above a horizontal plane 80cm above the lowest point of the entirely sprung structure of the car. The maximum width of the coachwork shall not exceed by more than 20cm that maximum width measured between two vertical planes tangent to the outer face of the front or rear wheels. No element of the car shall extend more than 3.94 inches (10 cm) beyond a vertical plane tangent to the outer face of the front or rear wheel.

5.1 Cockpit and Seats

5.2 There shall be seats of equal dimension and comfort for the driver and a passenger equally disposed on each side of the longitudinal axis of the car. Seats shall be firmly attached in the car, but may provide for adjustment for the size of the occupant. The passenger's space and seat shall remain usable throughout the competition and shall not be encroached upon by any element of the car of equipment except as provided in these rules.

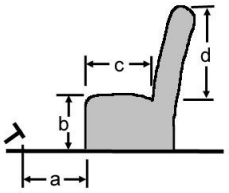

Figure 1

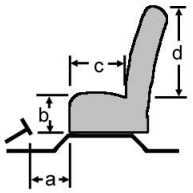

Figure 2

Driver and passenger space shall satisfy the following minimum dimensions:
The inside minimum width of the compartment shall be 40 inches measured at the immediate rear of the steering wheel hub and at right angles to the longitudinal axis of the car, and must be unobstructed and maintained at least 10 inches in a vertical plane. Seats must fulfill the following minimum dimensions:

"a" is always measured horizontally and parallel to the longitudinal axis of the chassis, between two vertical planes perpendicular to the longitudinal axis and defining from front to rear the open space on a level where such measurement is taken.

For the driver's seat, **"a"** is measured on the floor level, or at the bottom of any recess if need be, from the perpendicular of the furthest pedal in the position of rest.

For the passenger seat, the measurement is taken at a height of 8 inches above the floor, or at the bottom of the recesses, if need be.

In case of movable seats, it is forbidden to alter to position of any seat while the car is being measured.

"b" is measured vertically from the rear of "a" to the horizontal plane tangent to the highest part of the cushion as shown on the drawings.

"c" is measured in the horizontal plane defined above from the upper end of **"b"**, parallel to **"a"**, and tangent to the foremost point of the back of seats.

The arrangement of the body must be such that:

"a" plus **"b"** plus **"c"** equals 43 inches minimum.

The minimum width for the foot space for each person must be 10 inches measured at right angles to the longitudinal axis of the chassis.

5.3 **Bulkheads and Tanks**: Fuel tanks shall be isolated by means of bulkheads and so vented that in case of spillage, leakage, or a failure of the tank, fuel and fumes will not pass into the driver or engine compartment or around any part of the exhaust system. No part of any oil or water tank shall be exposed to any part of the driver and passenger compartment. Safety fuel cells specifically approved by the MCSCC are highly recommended in all cars.

5.4 **Windshield**: All cars shall be equipped with a windscreen constricted of transparent material which shall provide adequate protection for the driver at all speeds. Windshield wipers are not required.

5.5 **Visibility**: Coachwork shall provide visibility for driver and passenger forward and to both sides adequate for racing conditions. Rear view mirror(s) shall provide driver visibility to the rear of both sides of the car.

5.6 **Doors**: Coachwork shall provide at least two (2) rigid doors on closed cars, thereby giving direct access to each of the seats. The door openings may not be obstructed in any way. Doors are not required on open cars.

5.7 **Fenders**: Fenders shall be firmly attached to the coachwork with no gap between body and fender. Fenders shall be placed above the tires and shall cover them effectively by surrounding at least a third of their circumference. The rear of each fender shall not be higher than a horizontal line passing through the axis of the wheel. The width of each fender shall extend beyond the side of the tires when the wheels are parallel to the longitudinal axis of the car. In case the fenders constitute a part of the body, or are partly overhung by the structure of the body, the combination of fenders and body, or the body alone, shall meet the above requirements.

5.8 **Loss of Coachwork**: All major body components, such as front and rear hoods, fenders, doors, and windscreen must be maintained in normal position throughout the event.

6. Wheels and Tires

There shall be no restriction on the size of wheels or tires provided they are identical for the right and left front axles, and identical for the right and left rear axles.

7. Safety Equipment

Safety equipment shall comply with required safety equipment shown under *Automobiles – General Regulations*. In addition:

7.1 Batteries shall be enclosed in a covered battery box to prevent leakage or spillage of fluid, and shall be firmly attached to the car.

7.2 Adequate ventilation shall be provided to prevent the accumulation of fumes inside the car.

7.3 Battery boxes and fire systems are permitted in the passenger seat are permitted

Sports 2000

1. Definition

Open cockpit two seater rear engine sports racing car using a standard Ford 2000cc single overhead camshaft "NE" series engine with a two-venturi carburetor. Sports 2000 is a restricted class. Therefore any allowable modifications, changes, or additions are as stated herein. There are no exceptions. **IF IN DOUBT, DON'T.**

2. Safety Requirements

All safety equipment must comply with ***Automobiles – General Regulations***.

3. Chassis

3.1 Unrestricted except that the use of carbon fiber composite structural materials are prohibited. No engine oil or water tubes are permitted within the cockpit. The engine will be mounted upright and aligned fore and aft in the chassis.

3.2 It is the intent of these rules to minimize to use of "ground effect" to achieve aerodynamic downforce to a vehicle. Thus, the chassis and body surfaces which comprise the underside of the car must not deviate from a flat plane by more than 2.5cm (1 inch). For this purpose the underside is defined as being within the rectangular are along the length between the front edge of the front wheels and the rear edge of the rear wheels and across the outside of the front and rear rims. No aerodynamic devices (e.g. "skirts", body sides, etc.) shall extend below this surface anywhere on the car to the rear of the front wheels.

4. Bodywork Including Airfoils

4.1 The body must provide a cockpit for two seats and cover all mechanical components including wheels and suspension members except for the exhaust pipe, induction system and camshaft cover which may protrude though the engines cover.

4.2 Between the front and rear axle lines the body must:

4.2.1 Maintain over a minimum of 70% of the length of the wheelbase and over a depth of 20cm (7.9 inches) a minimum body width exceeding the greatest overall width across the tires less than 15cm (5.9 inches).

4.2.2 Exceed in height the top of the tires over a width of 50cm (19.7 inches) excepting only cockpit and engine openings. There must be no gap between the main body and the mudguards. The mudguards shall cover the full width of the tires around an arc of 120 degrees, which must extend forward ahead of the axle centerline on the front and rear wheels and behind the rear wheels to at least 7.5cm (2.95 inches) above the axle centerline.

4.2.3 Maximum vehicle length forward of the front axle centerline: 33 inches. Maximum vehicle length rear of the axle centerline: 37 inches.

4.3 The body above chassis level in the region of the cockpit must not be reinforced in any way which would complicate or hinder the rescue of the driver.

4.4 The cockpit opening seen in plain view must be symmetrical about the longitudinal axis of the car and must be large enough for a horizontal rectangle of 80cm (31.5 inches) by 40cm (15.57 inches) to be passed through with its minor axis aligned with the vehicle's longitudinal axis.

4.5 Space for two seats must be provided, each of at least 40cm (15.57inches) width and be positioned symmetrically about the vehicle's longitudinal axis. There must be at least 25cm (9.9 inches) wide foot space for both driver and passenger measured at pedals. The passenger space should provide as much seat space, elbow room, foot and leg room in terms of length, width and height as that of the driver. Battery boxes and fire systems are permitted in the passenger seat area.

4.6 Maximum height with driver aboard, excluding safety roll-over bar, must not exceed at any time 90cm (35.4 inches) measured from the ground.

4.7 Airfoils and/or spoilers are only permitted if they are mounted horizontally at the front of the vehicle and vertically plus or minus 20 degrees at the rear. There must be no gap between these surfaces, or any other airfoil, and the main bodywork. Spoilers conforming to the above specifications may be adjustable. All ducted air for heat exchangers (water/oil) must pass through the heat exchangers.

5. Engine

The only permitted engine is the Ford 2 liter single overhead camshaft "NE" series engine of the 1971-1974 Pinto/Capri @ liter single overhead camshaft engine with nominal bore 90.84mm and stroke 76.95mm, 85HH6015BA cylinder block is permitted with: NOTE: All blocks shall contain casing number HM6015BA, HM6015QQ, OR HM6015BB. Dashes in casting are not relevant. Production tolerances are permitted providing the total swept volume does not exceed 2000cc.

5.1 The camshaft and rockers must remain entirely unmodified: they must be fully manufactured and ground by the Ford Motor Co. Offset keys are permitted. It is prohibited to grind from blanks, regrind, or reprofile. Tuft riding or Parkerising is permitted. Maximum valve lift at determined points by camshaft rotation will be established. The use of a low rate substitute valve spring is permitted. Load characteristics of special checking spring: 12 lbs at 1.417 inches, 30lbs at 1,000 inches. Maximum valve lift against cam angle with zero tappet clearance: 0.400 +/- 0.005. Alternative cam Part Number = Elgin 2000FC

5.2 A standard crankshaft must be used. Spot machining to achieve balance is permitted. Tuft riding, Parkerizing, shot peening, shot blasting, and polishing are permitted. Minimum weight 27.5lbs.

5.3 The flywheel must be a standard component. The minimum weight is 14.4 lbs with ring gear and dowels. The flywheel may be machined to achieve minimum weight. Spot machining to achieve balance is permitted. A 1600 GT starter ring may be fitted. The use of any single plate clutch is permitted provided no modification is made to the flywheel other than changing the points of attachment of the clutch to the flywheel. Carbon fiber clutches are not permitted.

5.4 Maximum compression ratio will be controlled as follows:

5.4.1 Minimum Cylinder Head: combustion chamber volume 50cc (not including head gasket). Polishing and/or tooling of the cylinder head to achieve only the required combustion chamber volume is permitted.

5.4.2 Standard Ford Gasket: minimum thickness .9mm, minimum diameter of cylinder aperture 92mm.

5.4.3 Pistons must not protrude above cylinder block surface at TDC.

5.5 It is permissible to reshape inlet and exhaust ports by removal of metal within limits. Addition of material in any form is prohibited. Maximum diameter of inlet port a manifold head faces 39.5mm. Maximum dimensions of exhaust port at manifold face 35.5mm x 27mm. the distance between the valve centers and the angles of the valves must not be altered.

5.6 Pistons must be standard Ford production pistons, unmodified in any way except for balancing and as detailed herein. The following combinations are permitted:

5.6.1 Piston P/N 80HM6102LA with rings and pin. Standard Ford connecting rod with bolts, without bearings. Minimum permitted weight 1332.5 grams

5.6.2 Piston P/N 85HM6102DA with rings and pin. Standard Ford connecting rod without bearing, any rod bolt and nut may be used provided no modification is made to the connecting rod. Minimum permitted weight = 1255 grams. All three piston rings must be fitted; compression rings must be one piece, single homogeneous material-type with conventional plain gaps. Chromium plating of the top ring is optional; oil control rings must be either single piece twin-land type or apex three pieces (two rails and an expander). Localized machining of the gudgeon pin bosses to achieve balance and weight by simple machining, all external surfaces, dimensions, and profiles must remain standard with the exception of the top surface of the piston crown which may have simple machining to achieve balance and as require in Section 5.6 Maximum Compression Ratio.

5.6.3 Piston P/N M6102-B200 with pin. Standard Ford or alternate connecting rod with bolts, without bearing. Minimum permitted weight =1255 grams. NOTE: M6102-B200 piston assembly is not made by JE and is visually different. ID marks: M6192-B200 Ford Racing logo. All marks pin stamped on wrist pin bosses.

5.6.4 Piston P/N 21426 casting number 21426 (AE Hepolite) with rings and pin. Standard Ford connecting rod with bolts, without bearing. Minimum permitted weight = 1255 grams.

5.6.5 Piston P/N M6102-B200 with pin. Standard Ford or alternate connecting rod with bolts, without bearing. Minimum permitted weight = 1255 grams. NOTE: M6102-B200 piston assembly is now made by JE and is visually different. ID marks: M6192-B200 Ford Racing logo. All marks pin-stamped on wrist pin bosses.

5.7 Valves must remain standard, no re-profiling is permitted. The original 45 degree seat angle must be maintained.

Maximum face diameter inlet 42.2mm
Maximum face diameter exhaust 36.2mm
Maximum valve stem diameter 8.4 mm

5.8 Connecting rods must be standard Ford parts. Machining is permitted to remove metal from the balancing bosses to achieve balance only. Tuftriding, Parkerizing, shot peening, shot blasting, polishing, etc., are permitted. It is permitted to radius the area around the big-end cap retaining bolts. Big-end bolts, part No. 905500, are permitted.

5.9 Maximum valve lift against cam angle with zero tappet clearance: (Lift measure in mm)

	Inlet		Exhaust	
Angle	**Opening**	**Closing**	**Opening**	**Closing**
00	**10.442**	**10.442**	**10.442**	**10.442**
05	**10.36**	**10.36**	**10.36**	**10.36**
10	**10.11**	**10.11**	**10.11**	**10.11**
15	**9.69**	**9.69**	**9.69**	**9.69**
20	**9.11**	**9.11**	**9.11**	**9.11**
25	**8.37**	**8.37**	**8.37**	**8.37**
30	**7.45**	**7.45**	**7.45**	**7.45**
35	**6.38**	**6.38**	**6.38**	**6.38**
40	**5.17**	**5.17**	**5.17**	**5.17**
45	**3.86**	**3.86**	**3.86**	**3.86**
50	**2.59**	**2.58**	**2.58**	**2.59**
55	**1.50**	**1.47**	**1.47**	**1.50**
60	**0.86**	**0.81**	**0.81**	**0.86**
65	**0.65**	**0.56**	**0.56**	**0.65**
70	**0.54**	**0.43**	**0.43**	**0.54**
75	**0.46**	**0.33**	**0.33**	**0.46**
80	**0.37**	**0.19**	**0.19**	**0.37**
85	**0.26**	**0.08**	**0.08**	**0.26**
90	**0.20**	**0.01**	**0.01**	**0.20**

5.10 Engines will be mounted upright, and aligned fore and aft in the chassis.

5.11 A single carburetor only will be used on a standard inlet manifold. The carburetor will be a Weber 32/36 carburetor also may be used, carburetor with the swaged fuel inlet fitting, must be replaced by drilling and tapping the carburetor body for a threaded fitting. The air cleaner may be removed and a trumpet fitted, jets may be changed, both throttles may open together, cold start devices and diffuser bar may be removed, internal and external anti-surge pipes may be fitted, seals on emission control carburetors may be removed. The bottom of the lower column portion of the auxiliary venturi may be machined for purposed of high-speed enrichment. No other modifications are permitted. Chokes (venturi) must remain standard and no polishing or profiling is permitted.

5.12 The addition of material by any means to any component is permitted.

5.13 It is permitted, as means of repair, to replace damaged valve seats and cylinder bores by replacement cast iron valve seat inserts and cast iron cylinder liners. Valve guides may be replaced with cast iron or bronze, all to standard dimensions.

5.14 Balancing of reciprocating and rotating parts is permitted only by removal of metal from locations so provided by the manufacturer.
5.15 Non-standard rocker covers are permitted providing they in no way improve the performance of the engine.
5.16 Standard valve spring retainers must be used and single valve springs only are permitted. Shims are permitted and valve springs are otherwise free.
5.17 Exhaust system and manifold are unrestricted, within MCSCC safety regulations.
5.18 Lubrications system is unrestricted, dry sump is permitted. Localized machining of the cylinder block is permitted to allow fitting of the oil pump.
5.19 Oil coolers are unrestricted.
5.20 A liquid cooling system is mandatory but radiator and water pump are unrestricted. The radiator, if housed in or incorporating a cowl air-scoop deflector must comply with body regulations.
5.21 Fuel pump is unrestricted.
5.22 Distributors are unrestricted providing they retain the original drive and location. The distributor is defined as the components which triggers the L.T. current, and distributes the H.T. current.
"The Ignition Timing may only be varied by vacuum and/or mechanical means."
"It is prohibited to use any other method or component to trigger, distribute or time the ignition."
5.23 Only the standard inlet manifold shall be used. The ports may be reshaped by the removal of metal as long as the following dimensions are maintained: maximum size at head face = 1.437"9 (36.5mm), maximum size at carburetor flange = 3.405" (86.5mm) x 1.595" (40.5mm). The carburetor seat face may be machined to horizontal in the fore to aft plane. The water passage in the inlet manifold may be blanked off or plugged.
5.24 Gaskets and seals are unrestricted except for cylinder head gasket, carburetor-to-inlet manifold gasket, and inlet manifold-to-head gasket which must be standard Ford manufacture for the engine.
5.25 Pump, fan, and generator drive pulleys are unrestricted.
5.26 The crankcase breather may be altered or removed, but all breathers must discharge into a catch tank.
5.27 Mechanical tachometer drives may be fitted.
5.28 Generators are optional.
5.29 Standard, oversize and undersize bearings are permitted. This does not allowed reducing the bearing surface area by reducing the width of standard bearings.
5.30 The use of non-standard replacement fasteners, buts, bolts, screws, studs, and washers which are not connected with or which do not support any moving parts of the engine is permitted.
5.31 Only modifications or additions specifically covered by these regulations are permitted. All engine components not covered by these regulations must remain completely standard and unmodified.

6. Suspension
All parts must be of steel or ferrous material, with the exception of hubs, hub adapters, and bushes. Front and rear hub carrier material must be steel or aluminum alloy. Titanium prohibited. Springs: steel only. (Rear hub carrier material on cars manufactured before 1/1/83 material is unrestricted, but replacement parts shall be steel or aluminum alloy.)

7. Brakes
Aluminum alloy brake calipers are prohibited, otherwise unrestricted.

8. Shock Absorbers
Effective 1/1/83:

Design:	Unrestricted.
Case material:	Steel

9. Steering
Steering is unrestricted.

10. Wheels and Tires
Thirteen inch diameter wheels with maximum front rim width of 6 inches and rear 8 inches are the only wheel sizes permitted. Material is unrestricted providing it is metal.

11. Transmission
The gearbox must include an operable reverse gear, capable of being engaged by the driver while normally seated, and contain not more than four forward gears. The ratios are unrestricted.
Rear wheel drive, only is permitted.
Final drive ratio is unrestricted.
The differential cannot be modified in any way to limit its normal function. Torque biasing, limited slip and lock differentials are prohibited. Excessive shimming of the differential is prohibited.

12. Fuel Cells
Per ***Appendix X***

13. Fuel Capacity
41 liter (9 gallons) maximum.

14. Electrical
A self starter operated by the driver is mandatory. Two stoplights and two taillights each of at least 15 watts rating must be operable.

15. Weight

15.1	Standard 2 liter Ford, with cast iron head, standard cam	1310 lbs min
15.2	Standard 2 liter Ford, with aluminum head, standard cam	1335 lbs min
15.3	Standard 2 liter Ford, with cast iron head, alternative cam	1335 lbs min
15.4	Mazda MZR	1335 lbs min

16. Windscreens

Windscreens are optional.

17. Bulkheads and Cells

Fuel cells shall be isolated by means of bulkheads and so vented in case of spillage, leakage, or failure of the cell; fuel and fumes will not pass into the driver or engine compartment or around any part of the exhaust system. No part of any oil or water tank shall be exposed to any part of the driver and passenger compartment. Safety fuel cells specifically approved by the MCSCC as listed in ***Appendix X*** are required for cars registered after 1/1/83. Metal tank(s) may be used providing they are covered externally with a fireproof protective coating approved by the MCSCC, and that they are mounted within the main chassis structure. (For cars registered prior to 1/1/83.) There must be a liquid tight and fireproof bulkhead separating the fuel tank(s) from the cockpit.

Club Sports 2000

1. Purpose

1.1 The MCSCC Club Sports 2000 Category shall be for automobiles which are designed and constructed for road racing competition, offering provisions for driver and passenger, basically suitable for driving over normal roads.

1.2 Club Sport 2000 is intended to develop a venue where older Sports 2000 automobiles may compete with cars of near or equal technology.

2. Definition

Open cockpit two seater rear engine sports racing car using a standard Ford 2000cc single overhead camshaft "NE" series engine with a two-venturi carburetor. Club Sports 2000 is a restricted class. Therefore, any allowable modifications, changes, or additions are as stated herein. There are no exceptions. **IF IN DOUBT, DON'T.**

3. Safety Requirements

All safety equipment must comply with the General Competition Rules.

4. Requirements

4.1 Club Sports 2000 automobiles shall conform to all Sports 2000 requirements and specifications, except as modified by these rules.

5. Suspension

5.1 Cars shall maintain the original suspension design as delivered from the manufacturer.

5.2 Suspension maybe updated provided said updates attach to the original mounting points.

6. Shock Absorbers

Effective 1/1/83:

6.1 Design

6.1.1 Design is unrestricted except that shocks shall attach to the original mounting points.

6.1.2 Case material – Steel

7. Markings

7.1 All Club Sports 2000 automobiles shall display a class designation of "CS2" on both sides of the automobile.

8. Eligible Chassis

8.1	Apache	All
8.2	Chevron	All
8.3	Crossle	All
8.4	Lola	Up to and including T592
8.5	MoFoCo	All
8.6	March	All
8.7	Oscelot	All
8.8	Royale	Up to and including RP38
8.9	Shrike	All
8.10	Tiga	Up to and including SC87

Sports Renault

1. Definition

1.1 One design, fixed specifications, open cockpit, single seat sports racer with stock Renault, 1.7L engine.

2. Safety Requirements

2.1 Car will be delivered from the manufacturer with approved safety equipment. Replaced items shall be identical to the original parts, except safety harnesses which may be replaced by any other that conforms to ***Automobiles – General Regulations***.

3. Maintenance and Repairs

3.1 It is permitted to perform routine maintenance and repairs as long as existing parts are in no way modified and identical to the original parts. Fasteners (such as screws, bolts, studs, nuts, washers, and hose clamps) that do not attach to or support moving parts within the engine or trans-axle are unrestricted.

4. Chassis

NO MODIFICATIONS ALLOWED except as specified.

4.1 **Chassis Rub Block**: It is authorized to install up to eight (8) pads of any material to the underside of the frame to eliminate damage due to bottoming out. The pads shall be no larger than 1-1/2" wide x 8" long x 1/8" thick and fastened in at least two (2) places. They shall serve no other purpose. Carriage bolts may be used to fasten rub rails to the chassis. A steel plate of 1/1/2" wide x 1/8" thick x 14" long may be welded to the bottom of the frame below the rear shock mounting bracket.

4.2 **Seat Mounts**: It is required that a metal strap be installed on the right side of the seat between the bolt heads and the fiberglass side panel; this strap shall be 1" wide x14" long and 1/8" minimum thickness. A flat washer of at least one (1) inch diameter shall be used under any other seat attachment point. The aluminum side bracket, P/N 1380927, is required. Alternate seat belt mounting points may be installed in accordance with Enterprises' drawing 1390022.

4.3 **Steering Shaft Bracket**: It is authorized to cleanly and smoothly cut off the unused portions of the steering shaft bracket and/or pad the remaining portion to prevent injury as long as this serves no other purpose.

4.4 **Painting/Plating**: The chassis may be painted any color(s). Aluminum parts may be polished or anodized. Surface finishes such as plating or coating may be applied to the following parts for corrosion protection. Any piece that is a closed assembly (i.e., upper control arm) shall have a 1/8" DIA hole drilled in a no critical location to allow flushing of any entrapped plating fluids. Post plating bake out of four (4) hours at a temperature of 375 degrees F is recommended to prevent hydrogen embrittlement. Accepted pieces for plating:

Gearshift linkage	Wheels/Tailpipe/Header	Upper Control Arms
Lower Control Arms	Front Locating Arms	Rear Locating Arms
Rear Toe Link/Front Toe Link	Pedal Support Bracket	Pedal Casting Support Bracket
Pedal Support Bracket Reinforcement	Steering Column Assembly	Steering Shaft Assembly
Gear Shift Lever	Gear Shift Support Bracket	Tail Pipe Support Bracket
Upper Radiator Supports		

5. Bodywork

NO MODIFICATIONS ARE ALLOWED EXCEPT WHERE SPECIFICALLY AUTHORIZED WITHIN THESE RULES:

5.1 Bodywork crash-damage may be repaired, but exterior dimensions, shapes, thicknesses, and profiles shall remain unaltered. The addition of material to increase rigidity and/or the weight is prohibited. Sections shall meet the following weight requirements:

	Minimum	**Maximum**
Front	35lbs	57lbs
Center	25lbs	n/a
Rear	30lbs	n/a

Body opening modifications are absolutely forbidden, including cutouts for clearance of the SuperTrapp. Rotating the SuperTrapp slightly will allow for proper clearance.

5.2 At-track repair of crash-damage that does not conform to the above specifications will be allowed if replacement parts are not immediately available. This waiver will be noted in the vehicle logbook and will be good for that ONE EVENT ONLY.

5.3 Optional Bodywork Modification:

5.3.1 A 22" diameter wheel arch may be cut in each side of the tail section. Viewing the tail section from the side, draw a vertical line at the drive axle centerline. Locate the top of the wheel arch at a point measured from the bottom edge of the tail section 8.625" vertically along the centerline. The 22" diameter circle intersects the bottom edge of the tail section 10.625" either side of the centerline. The tail section may be reinforced in the forward and aft portions of the wheel arch. Dimension tolerance is +/- 0.5". NOTE: The minimum weight of the tail will not change,

5.4 A spring-type fastener may be used to replace the ¼ turn fastener located to the rear of the front wheel.

5.5 The car may be painted any color(s), except primer.

5.6 It will be required that all cars display the following.

5.6.1 The MCSCC logo on the front and both sides of the car.

5.6.2 Four (4) inch high "SR" class designation on both sides.

5.7 The forward braces shall be padded.

5.8 Ballast plates may be manufactured or purchased providing:

5.8.1 They are identical to the original parts.

5.8.2 They shall be mounted in the same manner as the original part.

5.8.3 They shall be mounted only in approved location.

5.8.4 They shall be fastened securely with nuts on both ends.

5.9 Rub Rails – P/N1380557LH; 1380558RH, may be fabricated from .060" thick aluminum. Dimensions shall be 2-1/2" high x 3" wide by 72" long. Additional fasteners may be used.

5.10 Nose pans – P/N 1380448 may be fabricated from 0.040" -0.060" thick aluminum. Such nose pans must be dimensionally and functionally the same as to the original nose pan and shall perform no other function.

5.11 Floor Pans – P/N 1380434, may be fabricated from 0.060" thick aluminum. Such floor pans shall be dimensionally and functionally the same as to the original floor pans and shall perform no other function.

6. Engine and Drive train

6.1 Engine

6.1.1 NO MODIFICATIONS ARE ALLOWED EXCEPT WHERE SPECIFICALLY AUTHORIZED WITHIN THESE RULES. This includes the induction, exhaust, cooling, electrical, and lubrication systems. All fluids are unrestricted. Engine maintenance which is permitted includes the replacement, but not modifications, of external engine parts such as spark plugs, oil filter, ignition parts, fuel pump, water pump, carburetor, alternator, timing belt, hoses, and manifold gasket. The engine may be rebuilt and all specifications of the engine shall remain original. The use of the new style air filter housing is allowed. Alternate commercially available carburetors are allowed if they meet the original carburetor specifications.

6.1.2 Vapor Lock: The vapor lock problem seems to be indigenous to certain temperature and humidity areas. If you race in one of those areas where vapor lock is a problem, you may install the vapor lock kit P/N 1390010 (electric fuel pump). While the kit is the most effective solution, the following may also be used: (Any or all modifications are allowed):

6.1.2.1 Reroute the existing fuel line without changing its length.

6.1.2.2 Replace the isolator block between the fuel pump and the head with one of a differential material.

6.1.2.3 Build and install a metal heat shield manufactured from a flat piece of material not to exceed 7" x 6" in size between the head and the fuel pump.

6.1.2.4 Install a pressure relief return line between the fuel tank and the second fitting on the fuel pump.

6.2 Transmission

6.2.1 NO MODIFICATIONS ARE ALLOWED. Maintenance involving machine work of any type is not allowed, with the exception that welding repairs to broken cases are approved as long as the welding serves no other purpose. The alternate shift fork P/N 1390001 may be installed. The alternate fourth gear P/N 1390100 may be used.

7. Suspension

7.1 NO MODIFICATIONS ALLOWED. Adjustments are permitted within the limits of the suspension components. No modification to the components. No modification to the components is allowed, with the exception that a Zirk fitting may be installed on the upper rocker arms to lubricate the pivots.

8. Brakes

8.1 NO MODIFICATIONS ALLOWED. Required front air ducts shall be installed. An extension may be welded to the side of the throttle pedal to improve heel-and-toe braking. Original rubber brake lines may be replaced with braided metal-covered (Aeroquip-type/size 3) brake lines. Replacement lines shall attach to all braking components with no modifications. Brake pad "anti-rattle" clips may be removed.

Brake pads of the following make and part number are allowed:
Hawk-Blue PN 801993E.595

9. Shock Absorbers and Springs

9.1 NO MODIFICATIONS ALLOWED. Bump stop shall remain on shock but may be slit vertically to ease removal for shock adjustment.

10. Steering

10.1 NO MODIFICATIONS ALLOWED. The steering rack may be shimmed with any combination of standard shims P/N 1380286 or P/N 1380287 to eliminate bump steer.

10.1.1 Steering wheel is unrestricted. A removable steering wheel is allowed. The steering wheel center web, flange, and rim shall be of a one piece construction. "Butterfly" steering wheels are not allowed.

11. Wheels

(Only the original steel or aluminum wheels) Aluminum wheels that are the same manufacture (American Racing Wheels), model (El Libre), size (13 inch), bolt pattern, and width (Front 5.5", rear 7") may be used. The raised letters 'SCCA' might not be present on these wheels. Alternate wheels of the following make and part number are allowed: OEM Steels; Amer Race/SCCA, and Weld/SCCA or equivalent.

11.1 Options

11.1.1 Current SRF Alloy wheels – WELB brand.

11.1.2 Make, manufacturer, and model unrestricted while requiring that the wheels:

11.1.2.1 Have the same minimum weight as the OEM alloys (13lbs front; 15lbs rear);

11.1.2.2 Have the same offset as the OEM alloys;

11.1.2.3 Are the same widths as the OEM alloys (5.5" front, 7.0" rear);

11.1.2.4 Have the same diameter as the OEM alloys (13.00")

11.1.2.5 Mount to the existing hubs without hub modifications (same bolt pattern).

11.1.3 Race participant is required to have manufacturing documents showing these specs are met.

11.1.4 **NO MODIFICATIONS or MACHINING ALLOWED** except to mount valve stems. Wheels may be painted any color(s). Plating is allowed. All wheel bearings shall be run with grease (not oil), no special coating of the bearings is allowed, and the bearing grease seal shall be intact (unmodified).

12. Fuel System

12.1 **NO MODIFICATIONS ALLOWED.** Unleaded pump gas only per ***Automobiles – General Regulations*** Section ***2***. As an alternate for the fuel vent line check valve, it is permitted to reroute and lengthen the cent line is such a way that the line makes a loop over the fuel filler bracket and ends below the bottom of the fuel cell. A filter may be used at the end of the line. Original rubber fuel supply line (from hard line to carb only) may be replaced with braided metal-covered (Aeroquip-type) fuel line, size six (6). Replacement line shall be the same length as the original.

13. Electrical System

NO MODIFICATIONS ALLOWED.

14. Weight

The car shall weigh 1580lbs minimum, including the driver.

15. Battery

May be replaced with any battery of group No. U1. It shall remain in the same location.

16. Vehicle Configuration

All Sports Renault cars shall comply to ***Automobiles – General Regulations***.

17. Updates

Provisions will be made for updates on all safety and mechanical improvements. Such updates will be effective when authorized by MCSCC and published in the Klaxon.

18. Sports Renault Drivetrain Protests

18.1 Protests shall be filed per the GCR.

19. Accessory Items

19.1 Mirrors. Any mirror may be used.

19.2 Seat modifications are permitted to allow padding for the comfort and safety of the driver. Foaming of the seat is permitted. Additionally, the seat may be cut or slit to allow the seat belt to cross the driver's body and remain in proper alignment. Any cuts in the seat should be reinforced to prevent splitting. Taller drivers are encouraged to use this option to gain greater roll bar clearance. The seat may be widened, but installation and location shall remain the same.

19.3 Use of cool suits by drivers is authorized providing the water tank is securely mounted and approved by Tech. The car shall weigh 1580lbs, with driver, but without the water tank.

19.4 Rubber seal, P/N 1390004, between air filter housing and carburetor is authorized.

19.5 Shift limiter assembly P/N 1380869 may be installed. The mounting point for the shifter may be moved along the frame rail forward of aft to adjust the shift knobs location to the length of the driver's arm.

19.6 Headrest pad may be reduced in thickness for driver's comfort to a minimum of one (1) inch.

19.7 Two-way radios may be installed in the car. Computerized driver enhancement systems may be installed and used for practice only. All components shall be securely attached and approved by Tech inspection.

19.8 Racers tape may be used to repair crash damage or as a precautionary means of securing the body retaining latches. Crash-damage is defined as having occurred during the current event, and the tape should be of any appropriate color if possible. Tape cannot be used to confine the airflow between the oil cooler and its duct, not to close up body seams.

19.9 Electronic memory tachometers from Auto Meter of Stack are allowed. **NO MODIFICATION** of the vehicle wiring harness is allowed. The power lead (+12V DC) shall be connected to the battery side of the ignition switch (not master switch).

19.10 A throttle return spring may be added at the foot pedal.

19.11 Any oil filter may be used provided:

- **19.11.1** It mounts in the same location as the OEM filter.
- **19.11.2** The oil filter chosen shall be an OEM equivalent justified by a filter manufacturer's application chart. The competitor is responsible for providing this documentation.
- **19.11.3** The capacity of the filter cannot be changed even if allowed under the above.

19.12 The addition of a steel floor pan in the area of the foot pedal/driver's feet, size shall be 27.87" x 21.56" x .125", made from sixteen (16) gauge steel.

19.13 Aluminum Racing Products (ARP) seat may be installed. Seat, brackets, and shift limiter may be modified to ease installation, and/or improve fit, and shall be of a safe and secure design. These modifications shall be approved for proper installation by a MCSCC Technical Inspector.

19.14 Radiator – P/N 130466, may be replaced with Modine P/N 1R698 or equivalent OEM manufacturer justified by one cross reference chart. The capacity, core thickness, etc., cannot be changed even if allowed under the above. The competitor is responsible for providing this documentation.

19.15 Ignition – Cap (Chrysler P/N 8983300124), Rotor (Chrysler P/N 8883300129), and Spark Plug Wires (Chrysler P/N 8983300136) may be replaced with an OEM equivalent justified by an ignition component manufacturer's application chart. The competitor is responsible for providing documentation,

19.16 The center pedal divider may be removed in its entirety.

19.17 Timing belts (Gates P/N T119 {old}; Gates P/N 5130XS {new}); Alternator belts (Gates P/N K060345 {old}; Gates P/N K050336 {new}; may be replaced with belt manufacturers application chart as direct replacement for the above numbers. The competitor is responsible for providing this documentation.

19.18 All gauges may be replaced with those of alternate manufacture. Replacement gauges shall fit in the existing dash and attach to the spec harness. Additional gauges may be added and shall fit in the existing dash, with all wiring inside the body, easily traceable, and separate from the existing harness.

19.19 Rod ends may be replaced with rod ends having specifications equal to or greater than the OEM supplied rod ends. Replacement rod ends shall be capable of being installed with no modifications to any original components.

19.20 A timing belt guard may be installed using existing engine studs for mounting. Material is unrestricted.

19.21 Original rubber clutch lines may be replaced with braided metal-covered (Aeroquip-type) size three (3) lines. Replacement lines shall be attached to all clutch system components with no modifications. Replacement lines shall be the same length as the originals.

19.22 A diaphragm type seal may be installed under the master cylinder caps.

20. Mandatory Items

20.1 Radiator screen mesh with a ¼" minimum opening shall be fitted to serve the single function of protecting the radiator from rock and stone damage and shall be a minimum of one (1) inch from the radiator core.

20.2 Radiator baffle or aluminum, P/N 1380891 to close the gap between the body and the radiator shall be installed.

20.3 Front brake ducts are required. Four (4) inch diameter clothes dryer or similar ducting extending from the openings in the side baffles to the brake area shall be used. The material shall be securely fastened to the upper or lower pan area with adequate ties or safety wire sufficient to secure it.

20.4 Air filter sock P/N 1380797 or P/N 1390797 is required. The filter may be oiled to improve filtering.

20.4.1 K&N filter #E-4640 may be used in place of the sock-type filter.

20.5 Air cleaner spacer P/N 1390498 (50mm maximum length) is required on the three (3) studs. Nuts shall be tight; (no play, looseness or slippage will be allowed for any reason) EFFECTIVE April 1, 1990.

20.6 SuperTrapp shall be in place and contain a total of twelve (12) plates in addition to the back and cover plates. Clinch nuts may be replaced with lock nuts, or safety wired to prevent accidental loosening. No play, looseness, or slippage with be allowed for any reason.

20.7 Battery post covers are per GCR.

20.7.1 Tallman Kit, #1380905, is required on all cars. **NO MODIFICATIONS** to any component are allowed except as authorized above.

Sports Renault Specifications

21. General

21.1 Testing and Sealing: In order to maintain the integrity, fairness, and cost-effectiveness of the "spec" class, the following drive train validation procedure is required, beginning with the 2004 season.

21.1.1 All cars are required to be presented to a MCSCC-approved testing facility.

21.1.2 All cars will be placed on a chassis dyno and measured for GCR compliance. The testing facility will perform this task for a reasonable set fee to be paid by the car owner.

21.1.3 The testing facility will physically apply seals to the engine, carburetor, and transmission, as a unit, immediately following the test if the car is in compliance with the GCR specifications.

21.1.4 The testing facility will keep a record of the test results, provide a copy for the vehicle owner, and must be included with the logbook at each competition entered.

21.1.5 Those cars with drive train components with intact "SCCA" or "Speed Sport Engineering" seals will not have to be re-sealed, but must still be tested for compliance.

21.1.6 Approved seals must be intact, and not obscured with dirt, grease, sealers, or any other foreign matter. Obscured seals must be cleaned by the competitor or be considered as non-existent for the purposes of competition.

22. Chassis

22.1 Vehicle Weight: 1580lbs minimum with driver.

22.2 Front Springs: 185 - 195lbs/inches, wire diameter .395 inches.

22.3 Rear Springs: 265 – 275lbs/inches, wire diameter .425 inches.

22.4 Anti-roll bar diameter: .56 inches.

22.5 Wheels: Front 5.5 x 13 inches, Rear 7.0 x 13 inches.

22.6 Tires:

22.6.1 Yokohama A008R and A048R. Optional rain tire – Yokohama A021-Rs.

22.6.1.1 FRONT: 185/60-R13

22.6.1.2 REAR: 205/60-R13

22.6.2 Goodyear Eagle A400 SRF tire

22.6.2.1 FRONT: 22" x 7" x 13"

22.6.2.2 REAR: 22" x 7" x 13"

22.7 Brakes: The following brake pads are allowed: Hawk-Blue, PN 801993E.595

22.8 Shock Absorbers: Standard Koni shock, P/N 82X-2255-SPA1 with standard oil.

22.9 Ground clearance: Minimum is 2.75 inches measured at the frame on the front and rear axle lines without driver.

22.10 Suspension linkage adjustments: No more than 9/16 inches of the threads showing on any spherical rod ends. This is a mandatory requirement to ensure sufficient engagement of the threads in the adjustable linkages.

22.11 Use of roller type and ball type wheel bearings are allowed.

23. Engines

23.1 Cam Timing:

23.1.1 Marks shall line up.

23.1.2 Intake Valve shall Close 40° ABDC

23.1.3 Intake Valve shall Open 4° BTDC

23.1.4 Exhaust Valve shall Open 40° BBDC

23.1.5 Exhaust Valve shall Close 4° ATDC

23.2 Cam Sprocket: Sprocket keyway and key in original configurations.

23.3 Ports: Intake manifold and/or cylinder head.

23.4 NO porting, polishing etc.

23.5 Ignition Box: P/N 7700720972 only. NO MODIFICATIONS OR ADJUSTMENTS OF ANY KIND ARE ALLOWED.

23.6 Flywheel: Minimum weight is fourteen (14) lbs including ring gear, no machining.

23.7 Pressure Plate: minimum weight is 7.5lbs no machining.

23.8 Clutch Disc: Minimum weight is 1.8lbs.

23.9 Spark Plugs: Champion RN9YC, N9YC, RN7YC, N7YC or equivalent as listed in a spark plug manufacturer's application chart as a direct replacement for the above numbers. The competitor is responsible for providing this documentation. Racing type spark plugs are not allowed. Use of resistor or non-resistor type spark plugs is allowed Plugs that have modified or multiple grounding elements are not allowed (e.g. Split Fires).

23.10 SuperTrapp Muffler: Twelve (12) discs plus back and cover plates, all bolts in place and tight.

24. Carburetor

24.1 Weber 32 DRT 101 as originally supplied.
K & N filter E-464 may be used in place of the stock type filter

NO MODIFICATIONS ALLOWED

Venturi Diameter	Primary	23mm
	Secondary	24mm
Main Jet Diameter	Primary	1.05 0r 1.07mm
	Secondary	1.10mm
Air Correction Jet	Primary	2.40 or 2.45mm
	Secondary	1.60mm
Idle Jet		0.60mm

24.2 Solex 28 34 Z10 as supplied.

NO MODIFICATIONS ALLOWED EXCEPT AS NOTED

Venturi Diameter	Primary	20mm
	Secondary	26mm
Main Jet Diameter	Primary	#975, 0.975mm
	Secondary	#1275, 1.275mm
Air Correction Jet	Primary	ZI 195, 1.75mm
	Secondary	ZM 145, 1.30mm
Idle Jet		#39 or #40

24.3 Vent extension P/N 1390766 is available for the solex carburetor.

25. Transmission

Seals: Seal intact or CSR. B. Gear Ratios:

	STD	ALT
1st	3.73	-
2nd	2.05	-
3rd	1.32	-
4th	0.90	0.93
Final Drive Ratio:	3.29	-

No limited-slip

25.1 Alternate shift fork P/N 1390001 is allowed.

25.2 Alternate 4th gear P/N 1390100 is allowed.

26. Bodywork

26.1 Nose-On Car

26.1.1 Length at center: 62” +/- ½”

26.1.2 Width at front axle centerline 64-1/2” +/- ½

26.2 Nose-Off Car

26.2.1 Height at axle centerline: Minimum 21-1/4” (measured with rigid straightedge across tops of fenders).

26.3 Center-On Car

26.3.1 Heights from side pod floor to top of leading edge behind center of front tire: 19” +/- ¼”

26.3.2 Cockpit opening length from firewall center behind seat to center top of opening lip: 37-3/4” +/- ¼”

26.4 Tail-On Car

26.4.1 Width at rear axle center: 66” +/- ½”

26.4.2 Length at center: 43-1/4” +/- ¼”

26.5 Tail-Off Car

26.5.1 Height to top of rear lip: 16-1/8” +/- ¼”

26.5.2 Openings on rear panel:

26.5.2.1 Outer: 9-7/8” Maximum x 1” Maximum

26.5.2.2 Inner: 18-1/2 x 1” Maximum

Spec Racer Ford

1. Definition

Note: Spec Racer Ford (**SRF**) class now refers to cars eligible under SCCA Spec Racer Gen3 rules for 2015, also known as “SRF3”.

The former MC Spec Racer Ford class of 2014 and prior GCRs is now titled Club Spec Racer Ford (**CSRF**, see next page.).

Club Spec Racer Ford

1. Definition

Note: Club Spec Racer Ford (**CSRF**) refers to the former Spec Racer Ford (**SRF**) class of 2014 and prior MC GCRs. One design, fixed specifications, open cockpit, single seat sports racer with Roush/Ford 1.9 L engine. Cars were packaged and sold by SCCA Enterprises, Inc. All replacement parts are supplied through SCCA Enterprises, Inc., and shall be official Spec Racer Ford parts except where noted in C.3., also Motorcraft or Roush parts as noted. Cars must be assembled per SCCA Enterprises' Assembly Manual and Roush Ford Spec Racer Installation Instructions. No modifications may be made to any part or system unless specifically permitted in these rules.

2. Safety Requirements

Car will be delivered from the manufacturer with approved safety equipment Replaced items shall be supplied through Enterprises, except safety harnesses and on-board fire systems may be replaced by any other that conforms to GCR Section 9.

3. Maintenance and Repairs

It is permitted to perform routine maintenance and repairs as long as existing parts are in no way modified and replacement parts are official Spec Racer Ford parts. If any official Enterprises' or Roush seal is broken, by accident or intent, the procedures outlined under C.20., shall be followed. Parts with an Enterprises part number having the prefix "R10" are considered to be unrestricted, providing their dimensions are comparable. No other parts are to be considered "unrestricted" except where specified..

4. Chassis

NO MODIFICATIONS ALLOWED except as noted in these rules.

4.1 **Chassis rub block**. It is authorized to install up to eight (8) pads of any material to the underside of the frame to eliminate damage due to bottoming out. The pads shall be no larger than 1-1/2'' wide x 2'' long x 1'' thick. If steel plates are used, they can be no larger than 1-1/2'' wide x 8'' long x 1/8'' thick and fastened in at least two (2) places. They shall serve no other purpose. Carriage bolts may be used to fasten rub rails to the chassis.

4.2 A steel plate of 1-1/2'' wide x 1/8'' thick x 14'' long may be welded to the bottom of the frame below the rear shock mounting bracket.

4.3 **Seat Mounts**. It is required that a metal strap be installed on the right side of the seat between the bolt heads and the fiberglass side panel; this strap shall be 1'' wide x 14'' long and 1/8'' minimum thickness. A flat washer of at least one (1) inch diameter shall be used under any other seat attachment point. The aluminum side bracket, P/N 1380927, is required. Alternate seat belt mounting points may be installed in accordance with Enterprises' drawing 1390022.

4.4 **Steering Shaft Bracket**. It is authorized to cleanly and smoothly cut off the unused portions of the steering shaft bracket and/or pad the remaining portion to prevent injury as long as this serves no other purpose.

4.5 **Painting/Plating**. The chassis may be painted any color(s). Aluminum parts may be polished, anodized, coated or painted.

4.5.1 Surface finishes such as plating or coating may be applied for corrosion protection. Any piece that is a closed assembly (i.e., upper control arm) shall have a 1/8'' DIA hole drilled in a noncritical location to allow flushing of any entrapped plating fluids.

4.5.2 Post plating bakeout of four (4) hours at a temperature of 375 degrees F is recommended to prevent hydrogen embrittlement. Any chassis part may be plated except for: Suspension springs, front and rear sway bars.

4.6 A 16 gauge steel plate measuring 10'' x 28'' may be added under the fuel cell bladder above vehicle floor.

5. Bodywork

NO MODIFICATIONS ALLOWED except as specified within these rules.

5.1 Bodywork crash-damage may be repaired, but exterior dimensions, shapes, thicknesses, and profiles shall remain unaltered. The addition of material to increase rigidity and/or the weight is prohibited. Use of the nose front center body pin is optional. Sections shall meet the following weight requirements:

	Minimum	**Maximum**
Front	35 lbs.	65 lbs.
Center	25 lbs.	N/A
Rear	27 lbs.	60 lbs.

5.2 At-track repair of crash-damage may be completed, but the minimum and/or maximum weight requirements may not be exceeded.

5.3 One spring type fastener per side may be used to replace the ¼ turn fastener.

5.4 The car may be painted any color(s), except primer.

5.5 The forward braces shall be padded per GCR Section 9.4., using any padding that conforms to the GCR, or Enterprises P/N 1380786.

5.6 Ballast plates may be manufactured or purchased providing:

5.6.1 Ballast plate may be no more than 20 inches long, 10 inches ide or ½ inch thick.

5.6.2 They shall be mounted in the same manner as the Enterprises' part.

5.6.3 They shall be mounted only in approved locations.

5.6.4 They shall be fastened securely with nuts on both ends.

5.7 **Rub Rails** – P/N 1380557 LH; P/N 1380558 RH, may be fabricated from .060'' thick aluminum. Dimensions shall be 2-1/2'' high x 3'' wide x 72'' long. Additional fasteners may be used.

5.8 **Nose Pans** – P/N 1380448 may be fabricated from .040'' - .060'' thick aluminum. Such nose pans must be dimentionally and functionally the same as the original nose pan furnished by Enterprises and shall perform no other function.

5.9 **Floor Pans** – P/N 1380434 may be fabricated from .060'' thick aluminum. Such floor pans shall be dimensionally and functionally the same as to the original floor pans furnished by Enterprises and shall perform no other function.

5.10 Optional Bodywork Modification:

5.10.1 Viewing the tail section of the car from behind, draw a vertical line at the left and right ends of the outer vents from the bottom edge of the bodywork up to a point two (2) inches below the crease at the lower edge of the vented panel. Make a vertical cut at each line. The horizontal cut is to be one (1) inch below the crease at the base of the vented panel. Leave a one (1) inch radius at each corner. Air Scoop (P/N F0190000) must be installed in conjunction with rear cutout per Enterprises installation instructions.

5.10.2 An alternate dash panel has been approved for use in Spec Racer Fords. The dash will be furnished by Enterprises only P/N 180100 or 180101

5.11 Required Bodywork Modification:

5.11.1 A 22.5'' diameter wheel arch shall be cut in each side of the tail section. Viewing the tail section from the side, draw a vertical line at the drive axle centerline. Locate the top of the wheel arch at a point measured from the bottom edge of the tail section 9.25'' vertically along the centerline. The 22.5'' diameter circle intersects the bottom edge of the tail section 11.1'' either side of the centerline. The tail section may be reinforced in the forward and aft portions of the wheel arch. Dimension tolerance is +/-0.75''.

6. Engine and Drivetrain

6.1 Engine

6.1.1 NO MODIFICATIONS ARE ALLOWED EXCEPT WHERE SPECIFICALLY AUTHORIZED WITHIN THESE RULES. This includes all fuel injection and engine management components, including exhaust, cooling, electrical and lubrication systems. All systems are subject to test procedures and must conform to OEM/Roush specifications. All fluids, except fuel, are unrestricted.

6.1.2 Ford recommends SAE 5W-30 or 10W-30 engine oils and Dexon II transmission fluid.

6.1.3 Engine maintenance which is permitted includes the replacement, but not modification of external engine and engine system parts.

6.1.4 All hose and harness routing and attachment is per ROUSH/FORD SPEC RACER INSTALLATION INSTRUCTIONS (RFSRII).

6.1.5 All rubber oil lines may be replaced with braided metal-covered (Aeroquip type/size eight) lines that utilize Aeroquip type/size 8 AN fittings. Hose clamps may be installed on the rubber oil lines.

6.1.6 A one-fourth (1/4) inch pipe thread hole may be placed in the top of the thermostat for installation of an air relief valve to facilitate filling of the cooling system.

6.2 Transmission

6.2.1 THE TRANSMISSION IS A SEALED UNIT. NO MODIFICATIONS ARE ALLOWED.

6.2.2 Transaxle/drivetrain work which is permitted includes replacement, but no modification, of axles, CV joints, clutch disc, pressure plate, flywheel, throw-out or pilot bearing, or transaxle assembly.

6.2.3 Any tampering or counterfeiting of the seals will render the transmission illegal for competition. Neither Enterprises, Inc., nor Roush Industries will be under any obligation to return the transmission to legal condition. No matching allowed.

7. Suspension

7.1 NO MODIFICATIONS ALLOWED. Adjustments are permitted within the limits of the suspension components. (See specifications – Section J.) No modification to the components is allowed, with the exception that a Zirk fitting may be installed on the upper rocker arms to lubricate the pivots.

7.2 Left rear lower control arm must be per RFSRII, and may be used on right side.

8. Brakes

8.1 NO MODIFICATIONS ALLOWED. Required front air ducts shall be installed. An extension may be welded to the side of the throttle pedal to improve heel-and-toe braking. Original rubber brake lines may be replaced with braided metal-covered (Aeroquip-type/size 3) brake lines. Replacement lines shall attach to all braking components with no modifications. Brake pad "anti-rattle" clips may be removed.

9. Shock Absorbers and Springs

9.1 NO MODIFICATIONS ALLOWED. Bump stop shall remain on shock but may be slit vertically to ease removal for shock adjustment. The same brand of shock absorbers must be used in all shock absorber positions on the car.

9.2 All shock absorbers must be sealed by Enterprises. Prior to sealing, the shock absorbers will be rebuilt by Enterprises or its authorized rebuilder. Effective 1/1/2001.

10. Steering

10.1 NO MODIFICATIONS ALLOWED. The steering rack may be shimmed with any combination of standard shims P/N 1380286 or P/N 1380287 to eliminate bump steer.

10.2 Steering wheel is unrestricted. A removable steering wheel is allowed. The steering wheel center web, flange, and rim shall be of a one piece construction. "Butterfly" steering wheels are not allowed.

10.3 Upper steering shaft may be modified to accept an alternate steering wheel and/or hub (if applicable).

11. Wheels

(only wheels supplied by Enterprises)

11.1 NO MODIFICATIONS or MACHINING ALLOWED except to mount valve stems. Wheels may be painted any color(s). Plating is allowed. All wheel bearings shall be run with grease (not oil), no special coating of the bearings is allowed, and the bearing grease seal shall be intact (unmodified). Only ferrous bearing housing and balls or rollers are permitted. Wheel spacers are not allowed.

12. Fuel System

12.1 All changes from the Renault SR system are listed in the RFSRII and must be installed as directed therein, with no modifications.

12.2 All rubber fuel lines may be replaced with braided metal-covered (Aeroquip type/size six) lines that utilize Aeroquip type/size 6 AN fittings.

12.3 The fuel filter located in the fuel cell may be removed and replaced with an in-line filter, P/N FLIPR-ANG.

12.4 A “tee” fitting may be installed in the Aeroquip line between the fuel cell and the fuel pump to facilitate draining of the fuel cell.

12.5 Enterprise P/N 591902 Regulator is permitted.

13. Weight

13.1 The car shall weigh 1670 lbs minimum, including the driver.

14. Battery

14.1 May be replaced with any battery of group No. U1. It shall remain in the same location.

15. Accessory Items

15.1 Mirrors must be as delivered. The cars may be upgraded to the new mirrors, P/N 190003, 190004 or 190007, and may use mirror extension, P/N 190023 or 190024. The original mirrors furnished with the kits may be used.

15.2 Seat modifications, including cutting, re-shaping and padding, are permitted to enhance the comfort and safety of the driver. Moving the location of the seat is not permitted. Foaming of the seat is permitted. Taller drivers are encouraged to use this option to gain greater roll-bar clearance. Additionally, the seat may be cut or slit to allow the seat belt to cross the driver’s body and remain in proper alignment per the GCR, Section 9. Any cuts in the seat should be reinforced to prevent splintering. The seat may be widened, but installation and location shall remain the same.

15.3 Use of cool suits by drivers is authorized providing the water tank is securely mounted and approved through Tech. The car shall weigh 1670lbs, with driver, but without the water tank.

15.4 Headrest pad may be reduced in thickness for driver’s comfort to a minimum of one (1) inch. If either the Aluminum Racing Products (ARP) or the Butler P/N 180268 seat is used, to aid with seat positioning, the head ret can be removed completely. It is recommended that the resulting hole in the firewall be covered with suitable aluminum sheet.

15.5 Two-way radios may be installed in the car. All components shall be securely attached and approved by Tech inspection.

15.6 Racers tape may be used to repair crash damage, or as a precautionary means of securing the body retaining latches. Crash-damage is defined as having occurred during the current event, and the tape should be of an appropriate color if possible. Tape cannot close body seams.

15.7 Electronic memory tachometers from Auto Meter or Stack are allowed. NO MODIFICATION of the vehicle wiring harness is allowed. The power lead (+12V DC) shall be connected to the battery side of the ignition switch (not master switch).

15.8 A throttle return spring may be added at the foot pedal.

15.9 Aluminum Racing Products (ARP) seat may be installed. If installed the bracket kit furnished with the seat shall be utilized and unmodified. Butler seat P/N 180268 may be installed.

15.10 Radiator – P/N 1380466, may be replaced with Modine P/N 1R98 or equivalent OEM manufacturer justified by one cross reference chart. The capacity, core thickness, etc., cannot be changed event if allowed under the above. The competitor is responsible for providing this documentation.

15.11 The center pedal divider may be removed in its entirety.

15.12 All gauges may be replaced with those of alternate manufacture. Replacement gauges shall fit in the existing dash and attach to the spec harness. Additional gauges may be added and shall fit in the existing dash, with all wiring inside the, with all wiring inside the body, easily traceable, and separate from the existing harness. Gage fittings

15.13 Rod ends may be replaced with rod ends having specifications equal to or greater than the OEM supplied rod ends. Replacement rod ends shall be capable of being installed with no modifications to any original components.

15.14 Original rubber clutch lines may be replaced with braided metal-covered (Aeroquip-type) size three (3) lines. Replacement lines shall be the same length as the originals as supplied by Enterprises.

15.15 Master cylinder caps are free.

15.16 The exhaust system may be thermal-coated and/or wrapped.

15.17 Spark plug wires may be fire sleeved.

15.18 Chassis/Engine data gathering systems may be installed. The data gathering system must have a separate wiring harness with visible wire ability.

15.19 It is forbidden to regroove tires.

15.20 Anti-roll bars (swaybars) may be disconnected, but not removed.

15.21 At the option of the owner a brake bias adjuster is permitted to be permanently installed and may be connected for all on-track activity. The control knob shall be installed in the cockpit in a position that is easily accessible to the driver. The Spec Racer Brake Bias Adjuster Kit, P/N R08800914, will be available through Enterprises and shall be the only approved adjuster. The kit must be installed per the instructions that accompany the kit.

15.22 At the option of the owner P/N F0390522 Enterprises Muffler Kit may be installed per instructions that accompany the kit.

15.23 It is permitted to insulate engine compartment fluid hoses using heat sleeve or wrap.

15.24 Spark Plug wire looms are allowed.

15.25 Exhaust gasket, Ford part number FOFZ 9448 A is allowed.

15.26 It is permitted to remove the gear from the end of the transmission speed sensor/dipstick or replace that part with an appropriate metal plug.

15.27 It is permitted to remove wiring harness plugs which are not used in the Ford conversion.

15.28 Alternate thermostat allowed in Standt P/N 3582/BT382180. Installation of this thermostat requires replacing the rubber sealing gasket and housing to head gasket, both available at Ford dealers or aftermarket suppliers.

15.29 It is recommended to use a 5.5 to 6 foot length of hose to run between the cam cover and air box, routing the hose forward and up along the roll bar support from the cam cover, before looping the vent hose back down to the air box. This is to keep oil from running directly from the engine's am cover vent to the air filter.

15.30 Alternate (recommended) location of the water temp gauge sender is as follows: In the "piccolo tube" where PN 1817 is previously installed, use a "tee" fitting with 3/8" NPT male threads on one end and 3/8" female threads on the other two ends. Install PN 1817 in on end of the tee and route the hoses to the expansion bottle as before. In the other port of the tee, install a 1/8'' female to 3/8" NPT male adapter. Install the temp sender into the adapter.

15.31 Aluminum coolant recovery bottle, as supplied by Enterprises. P/N 462800

15.32 Butler Head Restraint, Enterprises Part # 180267, may be used.

15.33 P/N 1150002 in Tank Fuel Pump Kit is allowed and recommended with parts as delivered. Installed per SCCA Enterprises "In Tank Fuel Pump Technical Bulletin."

16. Mandatory Items

16.1 Radiator screen mesh with a one-fourth (1/4) inch minimum opening shall be fitted to serve the single function of protecting the radiator from rock and stone damage and shall be a minimum of one (1) inch from the radiator core.

16.2 Radiator baffle of aluminum, P/N 1380891, to close the gap between the body and the radiator shall be installed.

16.3 Front brake ducts are required. Four (4) inch diameter clothes dryer or similar ducting, extending from the openings in the side baffles to the brake area shall be used. The material shall be securely fastened to the upper or lower pan area with adequate ties or safety wire sufficient to secure it.

16.4 Battery post covers are per GCR Section 9.

16.5 Body opening modifications are absolutely forbidden.

16.6 Tallman Kit, #1380905, is required on all cars.

16.7 All engine mounts, brackets, hoses, harnesses, and systems (see RFSRII) must be installed as per the RFSRII.

16.8 The NACA duct must be installed in the location specified and perform no other function than it's designed purpose.

16.9 The head shield (P/N 1610) must be the original, unmodified Roush part and be installed per the RFSRII.

16.10 The shifter assembly and all linkages must be installed as per the RFSRII. It is permissible to alter the length of the shift lever handle above it's upper pivot to tailor to driver preference. It is permissible to use the appropriate Torrington or Ape joint in place of the original Borgeson joint at the specified installation location in the shift linkage.

16.11 Upper control arm reinforcement straps, PN R0208087, or updated replacement arms are required on all Spec Racers by 1/1/95.

16.12 A rain/brake light comprised of a single standard trailer oval lamp, 2 ¼ inches x 6 ½ inches, with incandescent or LED illumination is required in the original roll hoop mounting location. No changes may be made to the original 3-pin connector on the wiring harness. The secondary filament of the brake light assembly shall be connected to a switch enabling use as a rain light.

16.13 Enterprises P/N 1140001 Aluminum surge tank is required. Radiator cap: lever-operated 16lb relief cap is required. Enterprises P/N 1180801 plastic cooling system overflow bottle kit is required. A bleed tube from the thermostat housing to the surge tank is required.

16.14 Alternator pulley (Enterprises P/N 902130) required.

16.15 It is required that all cars display the official sponsors of SCCA Enterprises decals and locations as specified by Enterprises.

16.16 The addition of a metal floor pan in the area of the foot pedals/driver's feet, size shall be 27.87" X 21.56" X 1.25" made from sixteen (16) gauge metal.

16.17 NO MODIFICATIONS to any component are allowed except as authorized above.

17. Chassis

17.1 Vehicle Weight: 1670lbs, minimum with driver.

17.2 Front Springs: 262-279 lbs/in Enterprises P/N 280387 or previous Enterprises supplied part (ex. RO28037).

17.3 Rear Springs: 412-429 lbs/in Enterprises P/N 280390 or previous Enterprises supplied part (ex. RO280389).

17.4 Anti-roll bar diameter: .56 inches.

17.5 Wheels: Front 5.5 x 13 inches; Rear: 7.0 x 13 inches.

17.6 Tires:

17.6.1 Dry: Goodyear Eagle "Spec Racer Ford;" size 22'' x 7'' x 13'', Model D2525. Wet: Goodyear Eagle "Spec Racer Ford"; size 22" x 7" x 13", Model D2524.

Effective 2/1/12 Tires:

17.6.2 Dry: Goodyear Eagle "Spec Racer Ford"; size 22" x 7" x 13" Model D2525. Wet: Goodyear Eagle "Spec Racer Ford"; size 22" x 7" x13", Model D2626.

17.7 Brakes: Hawk Blue 9012 pads P/N 801993 or 801994. Solid Rotor; Minimum thickness 10.50mm (0.4130 in.) P/N 800060. Vented rotor minimum thickness 13.25mm (0.522 in.); Must be converted as a set of four in all positions in place of the solid rotor. Vented rotors will be optional for 2012-2014 seasons, and required for 2015. Rubber caliper bushings may be replaced with bronze bushings P/N 1196185. Original caliper pistons may be replaced with vented caliper piston P/N 1196184.

17.8 Shock Absorbers: Standard Koni shock, P/N 82X-2255-SPA1 with standard oil or Penske P/N 280396. The bump rubber provided with the shock shall be used in unmodified, stock condition. No Koni or alternate bump stop is permitted to be used with the Penske shock. Shortening the Penske shock bump rubber is allowed. All shock absorbers must be sealed by Enterprises. Prior to sealing, the shock absorbers with be rebuilt by Enterprises or its authorized rebuilder.

17.9 Ground Clearance: Minimum is 2.75 inches measured at the frame on the front and rear axle lines without driver.

17.10 Suspension linkage adjustments: No more than 9/16 inches of the threads showing on any spherical rod ends. This is a mandatory requirement to ensure sufficient engagement of the threads in the adjustable linkages. It is not permissible to remove any jam nut on suspension links.

17.11 Negative camber shall not exceed 5 degrees front and rear.

18. Engines

18.1 Enterprises, Inc., and Roush Industries seals shall be intact in all locations. Two (2) each on cam cover, two (2) on the oil pan.

18.2 Cam timing: Marks shall line up.

18.3 Ports: No porting, polishing, etc..

18.4 EEC module is a Roush Spec Racer Ford specific part, sealed, P/N F0992012

18.5 Flywheel: Ford part #FOCZ-6375-A or equivalent min. weight: 16lb, 2oz

18.6 Clutch disc: Ford part #FICZ-7550-A or equivalent min. weight 1 lb 14 oz.

18.7 Pressure plate: Ford part #FOCZ-7563-A or equivalent min. weight: 8lbs

18.8 Pulley: Ford part #FOCZ-6316-A

18.9 Spark plugs: ONLY Motorcraft AGSF 24 C or AGSF 34 C or NGK TR6.

18.10 Oil filter: ONLY Motorcraft FL-400 Series

18.11 Air filter: ONLY Motorcraft #FA-1031 or Fram CA 3660

18.12 PCV Valve: Motorcraft #EV-147 or as supplied by Enterprises.

19. Transmission

Seals: Seals intact, Enterprises and Roush.

Gear Ratios:	STD
1st	3.42
2nd	1.84
3rd	1.29
4th	0.97
5th	0.73 or 0.77
Final Drive Ratio:	3.62 No limited Slip

20. Bodywork

20.1 Nose-on Car

20.1.1 Length at center: 62” +/- ½”

20.1.2 Width at front axle centerline: 64-1/2” +/- ½”

20.2 Nose-off Car

20.2.1 Height at axle centerline: Minimum 21-1/4” (measured with rigid straightedge across tops of fenders).

20.2.2 Center-on Car

20.3 Height from side pod floor to top of leading edge behind center of front tire: 19” +/- ¼”

20.4 Cockpit opening length from firewall center behind seat to center top of opening lip: 37-3/4” +/- ¼”

20.5 Tail-on Car

20.5.1 Width at rear axle center: 66” +/- ½”

20.5.2 Length at center: 43-1/4” +/- ¼”

20.6 Tail-off Car

20.6.1 Height to top of rear lip: 16 1/8” +/- ½”

20.6.2 Openings on rear panel:

20.6.2.1 Outer: 9-7/8” Maximum x 1” Maximum

20.6.2.2 Inner: 18-1/2” x 1” Maximum

Other Categories

American Grand Sport (AGS)

1. Introduction and Definition

1.1 The American Grand Sport (AGS) class are domestic production sedans offered for sale in the United States and which are modified for road racing. AGS cars must be V8 powered cars. This class is known as the American Muscle Cars. Cars shall be limited to the Modification Limits set forth by these rules. The following rules, specification and modification limits are set forth to obtain a reliable, safe, cost effective racecar and an even competitive advantage. Cars not listed per the MCSCC classification, which are American V8 muscle cars may be considered for classification. It shall be the driver's responsibility to provide the stock weight of the vehicle and other modification, via the factory shop manual and aftermarket vendor's specification's information. Consideration for such classification may have certain limitation to keep the competitive edge of the class as level as possible.

1.2 The MCSCC shall publish the AGS ***Vehicle Technical Specifications*** (VTS) containing the officially recognized specification for each car eligible to compete in the AGS class during the calendar year. The VTS shall specify the minimum weight as qualified for race with the driver and other specification for each classified car.

1.3 All cars must comply with the MC's GCR ***Automobiles General Regulations*** and the safety section of the AGS.

2. Safety

2.1 All cars are required to have a roll cage installed. The cage shall meet ***Appendix ZZ***, requirements for Closed Cars cage configuration, tubing size, material, and etc., except as provided for in these rules. The main hoop shall be attached to the car by plates welded to the cage and bolted or welded to the floor. The installation design must also incorporate a diagonal bar connecting the top of the main hoop to the lower front passenger side mounting point. Mounting plates shall be welded or bolted to the car. Each mounting plate shall be at least 0.080" thick if welded and 3/16" thick (with appropriate backing plates) if bolted. There shall be a minimum of three (3) bolts per mounting plate, if bolted. Each mounting plate shall be no greater than 100 square inches and shall be no greater than 12 inches or less than 2 inches on a side. Whenever possible, mounting plates shall extend onto a vertical section of the structure (such as a rocker box). Mounting plates may be multi-angled but must not exceed these dimensions in a flat plane. Any number of tubes may attach to the plate or each other. It shall attach to the car at no more than eight (8) points, consisting of the basic cage with six (6) points and two (2) additional braces. The forward part of the cage shall be mounted to the floor of the vehicle. In addition, the two (2) optional braces may be mounted, one on either side, from the forward section of the cage to the firewall of front fender wells. Two braces may pass through the firewall and attach to the strut towers, if such tubes pass through the firewall, any resulting holes shall be sealed. Main hoop braces may be mounted at the rear shock mounts/towers or suspension pickup points. Such rear braces may pass through any mandatory or optional bulkhead or panel separating the driver/passenger compartment from the trunk/cargo are/fuel tank/fuel cell area, provided the bulkhead is sealed around said cage braces. A lateral, diagonal may hoop illustrated in drawing No. 7. ***Appendix Z*** is required. Any number of additional reinforcing bars are permitted within the structure of the cage, providing they meet the minimum tubing size per ***Appendix Z*** and/or ***Appendix ZZ***. Such reinforcing tubes may pass through any mandatory or optional bulkhead or panel separating the driver/passenger compartment from the trunk/cargo are/fuel tank/ fuel cell area, provided the bulkhead is sealed around such reinforcing tubes.

2.2 Steering lock mechanisms shall be removed.

2.3 Fuel cells may be used, and are recommended, but shall be located within twelve (12) inches of the original fuel tank location. Additional reinforcement may be added to support the fuel tank location. Additional reinforcement may be added to support the fuel cell, but such reinforcement shall not attach to the roll bar/cage. Floor pan may be modified for installation. See ***Appendix X***.

2.4 An electrical master ("kill") switch shall be installed.

2.5 Safety harness systems, window nets, and fire extinguishers shall meet or exceed all requirements for Closed Cars vehicles and ***Automobiles – General Regulations***. Installation of an onboard fire system meeting the specifications of the GCR is permitted and recommended.

2.6 Exposed headlights, parking lights, tail lights, and side marker lights shall be taped. OEM light assemblies mounted on or below the bumpers shall be removed, and all resulting holes shall be covered to prevent air passage through said holes.

2.7 Windshield clips and rear window straps per the GCR ***GT Specifications*** Section ***7.3.4.2*** are permitted and recommended.

2.8 Towing eyes mat be fitted and are recommended.

2.9 Spare wheels and tires must be removed.

2.10 Airbags shall be disarmed and may be removed.

2.11 Hand controls are allowed in those instances where the driver can demonstrate the physical need for them.

3. Specification and Modification Limits

3.1 Engine

The following are the specification and modification limits for the engine. All cars must be the naturally aspirated V8 engine utilizing either pushrods or overhead camshaft reciprocating engines. Turbocharging and/or supercharging are prohibited.

3.1.1 Block

Standard OEM production engine block size must be as specified in the VTS list. Blocks must be of the same geometry and basic design as originally offered from the car manufactories. Engines may be bored to a maximum of 0.060 inch over standard bore size.

3.1.2 Piston

The compression ratio is not to exceed a 10:3:1 ratio.

3.1.3 Camshaft

Camshafts may be replaced with any unit not to exceed 0.500" of lift measured at the valve with zero lash. Any duration may be used. Rocker arms may be changed to a roller tip/fulcrum; any ratio of the rocker arm may be used as long as the max valve lift is maintained. Shaft mounted rocker arms are prohibited unless fitted originally.

3.1.4 Flywheel

The flywheel must maintain the factory stock diameter.

3.1.5 Cylinder Head

3.1.5.1 Any cast iron cylinder head may be used that does not exceed the listed valve size in the VTS list. Milling of cylinder head is allowed however maximum compression ratio may not exceed the values as defined.

3.1.5.2 No porting or polishing may be done except as listed here. Manifold and cylinder head port matching is permitted. No material may be removed further than one inch in from the manifold and/or cylinder head mounting face(s). Carburetor or throttle body mounting surface(s) may not be modified and external dimensions of the cylinder head or intake manifold may not be reduced to facilitate internal porting. Two piece manifolds may be port matched at their mating surface intermediate point but only to a depth of ½ inch for each piece, for a total of 1 inch. The application and/or use of any painting, coating, plating or impregnating substance (i.e. anti-friction, thermal barrier, oil shedding coatings, chrome, anodizing, etc.) to any integral engine surface or intake manifold is prohibited.

3.1.6 Valves

For valve limits, see VTS list at the end of this section.

3.1.7 Carburetor

3.1.7.1 Only one (1) carburetor or throttle body may be used. No venturi (including secondary or auxiliary) of any carburetor or throttle body may be modified in anyway. All inducted air shall pass through the throttle venturis.

3.1.7.2 Air cleaner assemblies may be modified, removed or replaced. Velocity stacks, ram-air or cowl induction is not permitted. If the original equipment was functional, it must be disconnected and non-functional, but the hood openings may remain open.

3.1.7.3 Any fuel-injected cars may alter or replace the engine management computer (chip), or ECU, provided that all modifications are done within the original OEM ECU housing. Only the stock (unmodified) OEM ECU connection to the wiring harness may be used. The allowance to modify the ECU in no way permits the addition of wiring, sensors, or piggybacked computers outside of the OEM ECU housing. The stock (unmodified) wiring harness must be used.

3.1.7.4 Adjustable fuel pressure regulators are permitted.

3.1.7.5 Fuel pump(s) may be relocated, but shall not be located in the driver/passenger compartment. If the fuel line(s) are relocated and are passing through the driver/passenger compartment, it/they shall be metal or metal-braided, and shall be securely fastened.

3.1.8 Intake Manifold

All air entering the intake tract shall pass through the carburetor or throttle body. No porting or polishing of the manifold is permitted except as allowed by Cylinder Head Section. If the EGR devices/nozzles are removed from a cylinder head or manifold, any holes remaining must be completely plugged.

3.1.9 Exhaust Manifold (primary header tube size)

Any exhaust header not to exceed 1.625" on any primary tube O.D. may be used. Any exhaust system from the header back may be used. Exhaust shall exit behind the driver, and must be directed away from the car body. A suitable muffler may be necessary to meet sound control requirements.

3.1.10 Lubrication System (wet sump system)

The oil pump must be of the original type (i.e. wet sump) however the pump may be changed. Dry sump systems are prohibited. Oil pans, pan baffles, scrapers, windage trays, oil pickups, lines, and filters are unrestricted. Oil and power steering hoses may be replaced with metal braided hoses (e.g. Aeroquip). A pressure accumulator/"Accusump" may be fitted. The location of the filter and the accumulator are unrestricted, but they shall be securely mounted within the bodywork. All oil lines that pass into or through the driver/passenger compartments shall be metal or metal-braided hose. Engine oil and oil additives are unrestricted. Oil catch tanks are permitted and recommended. All engine breathers or vapor recirculation lines, if disconnected, shall vent to a catch tank of one (1) quart minimum capacity. Such catch tanks must not be mounted in the driver/passenger compartment. Original valve cover(s) may be modified to alter or to add breather/filler.

3.1.11 Cooling System

Engine coolant fluid cannot be glycol based.

3.1.12 Electrical System

Any ignition system which utilizes the original type of distributor for spark timing and distribution is permitted. Internal distributor components and distributor cap may be substituted. Crankfire ignition systems are prohibited unless fitted as original equipment. The battery may be relocated in the vehicle as long as it is properly mounted in a safe and secure manner. If the battery is moved from the engine compartment it must be in a battery containment box. Additional battery hold down devices may be used, and are strongly recommended.

3.1.13 Miscellaneous

Oil cooler(s) may be added or substituted. Location within the body work is unrestricted, provided that it/they are not mounted within the driver/passenger compartment.

3.2 Clutch

Any clutch disc and pressure plate of stock diameter may be used, provided that they shall be bolted directly to an unmodified stock material type of flywheel. Balancing of the flywheel/clutch pressure plate assembly is permitted. Lightening of the flywheel beyond the minimum material removal necessary to balance is prohibited. The addition of an external scatter-shield is permitted and recommended.

3.3 Transmission

No alteration to the stock transmission gear ratios for the make, model, type and engine size of automobile is allowed except for the overdrive gears and/or unless an approved optional transmission is used. Any overdrive fifth and sixth gear ratio may be used. Optional approved transmissions are the tremec #3550 & #TKO and GM T10 & T56. Any stock type of manual transmission as used during the vehicle life may be used (4-speed, 5-speed or 6-speed), except for transaxles.

3.4 Drive Shaft

Drive shafts may be a one-piece steel or aluminum shaft but not less than the stock diameter. Drive shaft loops are recommended

3.5 Final Drive

3.5.1 Any final drive ratio or any limited-slip and locked differential is permitted provided it fits the stock differential housing without modification to the housing.

3.5.2 Only “Live” rear axle housings may be used, no independent rear suspension, or transaxles may be used.

3.5.3 Ford 9” rear axle is permitted in all cars.

3.5.4 The center section may only be of ferrous material.

3.6 Brakes

3.6.1 Any single front caliper with no more than four pistons may be used provided that they are mounted in the same location as the standard production. Modifications may be done to the factory spindle to provide the mounting of any of these optional calipers.

3.6.2 Any single rear caliper with no more than four pistons may be used provided that they are mounted in the same location as the standard production. Modifications may be done to allow the mounting of any of these approved calipers.

3.6.3 Rotors friction surface must be of iron material. Rotors may be of a one-piece, or a separate rotor hat, hub, and hub type of assembly. Front rotors are not to be larger than 13” overall diameter, x 1.250” width. Rear rotors may not be larger than 12” overall diameter. No cross-drilling or vanes may but into the rotor friction surface.

3.6.4 Air ducts may be fitted to the brakes, provided that they extend in a forward direction only, and that no changes are made in the body/structure for their use.

3.6.5 Brake proportioning valves may be used provided that they are of the in-line, pressure-limiting type.

3.6.6 Water cooling or other liquid cooling of the rotors are not allowed. No water cooled calipers are permitted also.

3.6.7 Replacing of the original master cylinder to dual master cylinder is prohibited.

3.7 Wheels & Tires

3.7.1 Any wheel or tire may be used within the following limitations: Maximum wheel diameter for the front and/or back is 17” and the width not to exceed 9-1/2” wide. Knockoff/quickchange type wheels are prohibited.

3.7.2 Any DOT-approved tire is permitted. Racing slicks, recapped, or regrooved tires are not allowed. Tire width will not exceed 275 mm wide. The only modifications allowed to the tires are having them “shaved” or “trued”.

3.7.3 Track may be changed to accommodate larger tires, provided that there is safe tire/fender/chassis clearance under all conditions of steer, bump, and rebound.

3.7.4 Tire tread (that portion of the tire that contacts the ground) shall not protrude beyond the fender opening when viewed from the top perpendicular to the ground.

3.8 Chassis & Frame

(Springs, Shocks Absorbers, Suspension control, Suspension mounting points.)

3.8.1 Minimum ride height is five (5) inches, to be measured at the lowest point of the rocker panel, but not to include welded seams or front air dam and splitters. Wheelbase must remain as factory stock dimension.

3.8.2 Any shock absorber or strut may be used, provided it attaches to the original mounting points. The number and type of shock absorber or strut shall be the same as stock. Cars equipped with a front strut type of suspension may use slotted adjusting plates at the top mounting point for adjusting caster or camber. If slotted plates are used, they shall be located on existing chassis structure and may not serve as reinforcement for the structure. Material may be removed from the top of the strut tower to facilitate installation of adjuster plates. The upper pivot point on the strut may use a bearing at this joint. Strut front ends stay strut design.

3.8.3 Only stock lower control arms in their stock locations on the body are permitted. Only stock factory front spindles are permitted. Remote reservoir shock absorbers or struts are also permitted. No shock absorber or strut may be capable of adjustment while the car is in motion. Coil-over struts or shock absorbers, where a threaded sleeve is permanently attached to housing, are prohibited unless fitted as standard equipment.

3.8.4 Springs of any origin may be used, provided they are of the same number and type as originally fitted, i.e., coil, leaf, torsion bar, and that they shall be installed in the original location using the original system of attachment. Spacers, including threaded units with adjustable spring seats, may be used with coil springs, provided the spacers are not permanently attached to the shock/strut housing.

3.8.5 Limiting straps to prevent a spring from becoming dislodged are permitted.

3.8.6 Bar attachment and pivot points on the chassis shall remain as stock. Control arm mounts may use adjustable ends, and may be fitted with heim joints. Any bushing material may be used.

3.8.7 Cars may add only two (2) front stayrods, located in the following areas:

3.8.7.1 Between the lower suspension mounting points.
3.8.7.2 Between the upper strut towers and firewall on strut equipped cars.
3.8.7.3 Between the upper front shock absorber mounts on cars with other forms of suspension.
3.8.7.4 Cars may add one rear stayrod between the top of rear shock towers only.

3.8.8 Original front and rear control arms may be reinforced or have their bushing material changed. Front control arm bushing may be replaced with offset units to change the suspension geometry; no modification may be done to these attaching points. Original rear control arms may be replaced with aftermarket units using the same suspension and chassis location points. Original (front/rear) or aftermarket (rear) units may be fitted with adjustable spring seats. The rears may be fitted with length adjustable heim joints for changing pinion angle. Panhard rods may be replaced with aftermarket units, and/or fitted with adjustable rod ends. The attachment points may be modified, relocated, or reinforced.

3.8.9 Original torque arms may be reinforced, or replaced with aftermarket units. The ends may be fitted with adjustable ends. The attachment points may be modified, relocated, or reinforced.

3.8.10 No other relocation or reinforcement of any suspension component or mounting point is permitted.

3.8.11 No part of the car, except for the exhaust system and suspension components, shall be lower than the lowest part of the wheel rims.

3.8.12 Sub-frame connectors are permitted, providing the sub-frame connectors perform no other function, sub-frame may have crisscross bracing and may incorporate a drive safety hoop.

3.9 Body

3.9.1 The following outer panels must maintain the factory shape, material and size; front fenders, door panels, roof, rear quarter panels, hatch or trunk lid.

3.9.2 Fenders and wheel openings must remain unmodified. It is permitted to roll under or flatten any interior lip on the wheel opening to facilitate running a large wheel and tires. Cars with plastic/composite fenders may remove any interior wheel opening lip, but the resulting material edge shall be no thinner than the basic fender material thickness.

3.9.3 Front spoiler/splitter/air dams are permitted. Spoiler/splitters shall not extend more than 2 inches beyond the front outline of the original front bumper, and are not less than 5" from the ground, and are flush with the sides of the car when viewed from above, and are mounted no farther back than the front of the front wheel opening.

3.9.4 A rear wing/spoiler is permitted providing that it does not extend more than 1" beyond the rear outline of the original bumper, is flush with the sides of the car when viewed from above and is no taller than the roof line of the car. The spoiler/wing may have support or reinforcement but not extend beyond the outline of the car.

3.9.5 Hood and truck pins, slips, or positive-action external latches are permitted. Stock hood and trunk latches and hinges may be disabled or removed. If so, some positive-action external fastening method shall be used. Manual and electric sunroofs, original or aftermarket, where the panel is not normally removable shall be retained and run in the closed position. Components (motors, cables, and rails) may be removed provided the panel is securely retained. Removable sunroof or T-top panels may be retained if bolted in or removed completely. Convertible topped cars are not allowed in this class.

3.9.6 Any paint scheme and markings meeting GCR ***Automobile General Regulations*** Section ***4*** are permitted.

3.9.7 Body repair must be performed using every reasonable effort to maintain stock body contour, lips, etc. Any body repair modification having as its sole purpose increased clearance is prohibited. Cars shall meet the requirements of GCR ***Automobiles General Regulations***, Section ***9.3.2***, Appearance at all times.

3.9.8 Front windshield glass stays glass and the rear window/hatch may stay glass or be replaced with safety lexan or other safety clear material.

3.10 Driver/Passenger Compartment/Trunk

3.10.1 The driver's seat may be replaced with any seat suitable for competition, including a racing-type bucket seat. Driver's seats shall be firmly mounted to the structure of the car and mounted or supported by the main hoop of the roll cage (back support). Seats homologated to and mounted per FIA standard 8855-1999 need not utilize a seat back brace. Homologation labels must be visible.

3.10.2 Any steering wheel, except wood rimmed types, may be used. Steering wheels may be of quick disconnect type.

3.10.3 Gauges and instruments may be added, replaced, or removed. Other than modification made to mount instruments and provide for roll cage installation, the remainder of the dash "board" or panel shall remain intact.

3.10.4 Rear seats may be removed, but in those automobiles where the rear seatback provides the only solid bulkhead between the driver & passenger compartment and an exposed stock gas tank, a metal bulkhead completely filling the exposed seatback opening must be installed. In those automobiles where rear seatback removal does not expose the stock gas tank directly to the driver/passenger compartment, a metal (only) bulkhead is optional.

3.10.5 Any remaining interior items may be removed, except for the one stated herein. The driver's inner door trip panel, arm rest, map pockets, and inside door latch/lock operating mechanism may be removed and the inner door structural panel may be modified, but not removed. The stock side impact beam, if equipped and the outside door latch/lock operating mechanism shall not be removed or modified. Any gutting of the door shall only be made to the driver door and shall only be made if the roll cage incorporates NASCAR-style side protection extending into the door. Door window glass and window operating mechanism may be removed.

3.10.6 Modifications may be made to the foot pedals to improve the comfort of and control accessibility to the driver. Dead pedal/foot rest and heel stop may be added.

3.10.7 Ducting may be added to provide fresh air to the driver/passenger compartment. This ducting shall be located in the driver and/or passenger window area, with no modification to the bodywork.

3.11 Vehicle Technical Specifications

Vehicle American Motors AMX/Spirit	**Year** 1979-1983	**Min. Weight** 3100 lbs
Engine Displacement 5.0L/304 cid V8	**Block** Cast Iron	**Head** Cast Iron
Valve Size 1.94” lt & 1.60’ Ex	**Induction System (2)** Original Carburetor or 600 cfm Holley #4776	**Intake Manifold (1)** Original Intake or Edlebrock Performer RPM #2131 or #3731
Note: Other changes as noted in the AGS modification limits.		

Vehicle Chevrolet Camaro or Pontiac Firebird	**Year** 1982-2002	**Min. Weight** 3200lbs
Engine Displacement 5.0L/305 cid V8	**Block** Cast Iron	**Head** Cast Iron
Valves Size 1.94” Int. & 1.60” Exhaust	**Induction System (2)** Original 5.L-TPI or Carburetor or 600 cfm Holley #4776	**Intake Manifold (1)** Original Intake or Edlebrock Performer RPM #710
Note: Other changes as noted in the AGS modification limits.		

Vehicle Ford Mustang	**Year** 1979-2005	**Min. Weight** 3100 lbs
Engine Displacement 5.0L/302 cid V8	**Block** Cast Iron	**Head** Cast Iron
Valves Size 1.94” Int. & 1.60” Exhaust	**Induction System (2)** Original 5.L-Fuel Injection or Carburetor or 600 cfm Holley #4776	**Intake Manifold (1)** Original Intake or Edlebrock Performer RPM #7121
Note: Other changes as noted in the AGS modification limits		

Vehicle Ford Mustang	**Year** 1979-2005	**Min. Weight** 3100 lbs
Engine Displacement 4.6L SOHC/280 cid V8	**Block** Cast Iron	**Head** Cast Aluminum
Valves Size 1.84” Int. & 1.50” Exhaust	**Induction System** OEM Fuel Injection System	**Intake Manifold** OEM Manifold only
Note: Engine shall not have any modification, except for in front of the throttle boy and exhaust sys		

Vehicle Mercury Capri	**Year** 1979-1986	**Min. Weight** 3100 lbs
Engine Displacement 5.0L/302 cid V8	**Block** Cast Iron	**Head** Cast Iron
Valves Size 1.94” Int. & 1.60” Exhaust	**Induction System (2)** Original Carburetor or 600cfm	**Intake Manifold (1)**
Note:		

Notes:

(1) When using the original carburetor, the original manifold must be used also.
(2) When using the Holley carburetor (#4776), you may use the Holley insulator #108-12.
All automobiles must comply with GCR ***Automobiles - General Regulations.***

Street Tuner Category

1. GCR

All automobiles must comply with ***Automobiles – General Regulations.***

2. Purpose

The intent of the classes is to provide a group for cars exceeding the prep level of IT but falling short of full GT preparation. It provides a place for vehicles with engine and transmission swaps to compete, as well as turbocharged and/or supercharged cars.

3. Eligibility

Cars must be production based (series produced). Custom frames/chassis, tube frame vehicles, and sports racer type bodies are not permitted.

4. Authorized Modifications

Only the following modifications are authorized. Modifications shall not be made unless authorized herein. No permitted component/modification shall additionally perform a prohibited function.

5. Classes

5.1 ST1: N/A engines 2.3L and under and forced induction engines 1.5L and under.
- **5.1.1** Turbocharged/supercharged cars add 50% to the ST1 weight table.
- **5.1.2** B-Spec cars meeting all B-Spec rules and weights are eligible.
- **5.1.3** ITD cars meeting all IT rules and weights are eligible.
- **5.1.4** Engines under 0.8L must run at the weight of a 0.8L car.

5.2 ST2: N/A engines 3L and under and forced induction engines 2L and under.
- **5.2.1** Turbocharged/supercharged cars add 50% to the ST2 weight table.
- **5.2.2** ITR/S/A/B/C cars meeting all IT rules and weights are eligible.
- **5.2.3** SCCA T3/4 cars meeting all Touring (T) rules and weights are eligible.
- **5.2.4** 2015-2018 MX-5 Cup cars meeting all Cup rules and weights are eligible.
- **5.2.5** Engines under 1.0L must run at the weight of a 1.0L car.

5.3 ST3: N/A engines 4L and under and forced induction engines 2.6L and under.
- **5.3.1** Turbocharged/supercharged cars add 50% to the ST3 weight table.
- **5.3.2** ITGT cars meeting all IT rules and weights are eligible.
- **5.3.3** Engines under 2.0L must run at the weight of a 2.0L car.

5.4 ST4: N/A engines 6L and under and forced induction engines 4L and under.
- **5.4.1** Turbocharged/supercharged cars add 50% to the ST4 weight table.
- **5.4.2** SCCA T2 cars meeting all Touring (T) rules and weights are eligible.
- **5.4.3** Engines under 2.5L must run at the weight of a 2.5L car.

6. Wheels/Tires

6.1 Any wheel may be used.

6.2 Any DOT approved tire is permitted. Tire diameter is unrestricted. Tires may be "shaved" or "trued".

6.3 Nominal tire width size is as follows: ST1 = 225, ST2 = 255, ST3 = 285, ST4 = 315. Wider tires than nominal are allowed, but require an addition of 2% to the minimum weight.

7. Safety

7.1 All automobiles are required to fit a roll bar per ***Appendix ZZ.*** On cars where the rear window/bulkhead prohibits the installation of rear braces (Porsche 914, Pontiac Fiero), the main hoop shall be attached to the body by plates welded to the cage/bar and bolted to the stock shoulder harness mounting points. This installation design must also incorporate a diagonal bar connecting the top of the main hoop to the lower front passenger side mounting point (“Petty Bar”). Alternatively, the rear window may be removed and a clear, Plexiglas replacement installed. The rear cage braces may pass through this replacement window and through the engine cover or bodywork to allow connection to the frame unibody. Such allowance shall be noted on the car’s specification page.

7.2 Steering lock mechanisms shall be removed.

7.3 The stock fuel tank may be replaced with a fuel cell. The fuel cell shall be located within twelve (12) inches of the original fuel tank location. Additional reinforcement may be added to support the fuel cell, but such reinforcement shall not attach to the roll bar/cage. Floor plan may be modified for installation. See ***Appendix X.***

7.4 An electrical master (“kill”) switch is permitted and recommended.

7.5 Safety harness systems, window nets, and fire extinguishers shall meet or exceed all requirements for Improved Touring vehicles. Installation of an onboard fire system meeting the specifications of the GCR is permitted and recommended.

7.6 Exposed headlights, parking lights and side marker lights shall be taped. OEM light assemblies mounted on or below (but not in) the bumpers shall be removed.

7.7 Spare Wheels and tires shall be removed.

7.8 Airbags shall be disarmed and removed.

7.9 Hand controls are allowed in those instances where the driver can demonstrate they physical need for them.

8. Chassis

8.1 Chassis may be modified to allow authorized modifications but must remain recognizable as the original production frame.

8.2 Suspension must remain production type (strut, trailing arm, SLA, etc.). Modifications are allowed.

8.3 Cars with a strut suspension may reduce their minimum weight by 2.5%.

9. Brakes

9.1 The use of any dual master cylinder and/or pressure equalizing device is permitted. All cars shall be equipped with a dual braking system operated by a single control. In the case of leakage or failure to any point in the system, effective braking power shall be maintained to at least two (2) wheels.

9.2 Servo-assist braking systems are unrestricted.

9.3 Backing plates or shields may be removed. Brake air ducts may be fitted, provided they extend only in a forward direction

9.4 Parking brakes may be removed.

9.5 The brake lines shall be metal tubing, metal-braided hose or flexible brake hose. Lines may be relocated and given additionally protection.

9.6 Brake discs, calipers and/or drums are unrestricted, provided that the discs or drums are mounted in the same location (e.g., outboard vs. inboard) as the standard production automobile.

9.7 Water spray brake cooling systems are permitted. No water-cooled calipers are permitted.

9.8 Carbon brake rotors are prohibited.

10. Transmission/Final Drive

10.1 Only production differential/transaxle housings are allowed. Modifications are allowed.

10.2 Any final drive ratio is permitted. Any differential is permitted.

10.3 Only production transmissions are allowed. Sequential transmissions are not allowed.

10.4 Hardware items (nuts, bolts, etc.) may be replaced by similar items performing the same fastening function(s).

10.5 Front wheel drive cars may reduce their minimum weight by 1% for ST1, 2.5% for ST2, 4% for ST3, and 5.5% for ST4.

11. Bodywork

11.1 Bodywork not covered below is unrestricted provided all safety requirements are maintained, but must remain recognizable as the original production body.

11.2 No aerodynamic device shall extend more than 150 mm beyond the OE sides or more than 300 mm beyond the OE front and back of the car, when viewed from above.

11.3 No aerodynamic device shall extend more than 300 mm above the OE height of the car.

12. Engine

12.1 Only production engines are allowed; modifications are allowed.

12.2 Cockpit adjustable engine management systems shall be installed out of the reach of the driver while racing. Such devices shall not be operated remotely by any device or person including from outside the vehicle while the vehicle is on-track, in the pits, or impound.

12.3 Engines with 2 valves per cylinder may reduce their weight as follows: naturally aspirated 10%, turbocharged/supercharged 5%.

13. Interior

13.1 Any interior components may be removed provided they do not prevent the safe operation of the vehicle.

14. Weights

14.1 **ST1:** Required minimum weight is 1.55 lbs/cc. See table below.

Engine Displacement [cc]	Minimum weight [lbs]	Engine Displacement [cc]	Minimum weight [lbs]
800	1240	1600	2480
900	1395	1700	2635
1000	1550	1800	2790
1100	1705	1900	2945
1200	1860	2000	3100
1300	2015	2100	3255
1400	2170	2200	3410
1500	2325	2300	3565

14.2 **ST2:** Required minimum weight is 1.25 lbs/cc. See table below.

Engine Displacement [cc]	Minimum weight [lbs]	Engine Displacement [cc]	Minimum weight [lbs]
1000	1250	2100	2625
1100	1375	2200	2750
1200	1500	2300	2875
1300	1625	2400	3000
1400	1750	2500	3125
1500	1875	2600	3250
1600	2000	2700	3375
1700	2125	2800	3500
1800	2250	2900	3625
1900	2375	3000	3750
2000	2500		

14.3 **ST3:** Required minimum weight is 0.95 lbs/cc. See table below.

Engine Displacement [cc]	Minimum weight [lbs]	Engine Displacement [cc]	Minimum weight [lbs]
2000	1900	3100	2945
2100	1995	3200	3040
2200	2090	3300	3135
2300	2185	3400	3230
2400	2280	3500	3325
2500	2375	3600	3420
2600	2470	3700	3515
2700	2565	3800	3610
2800	2660	3900	3705
2900	2755	4000	3800
3000	2850		

14.4 ST4: Required minimum weight is 0.65 lbs/cc. See table below.

Engine Displacement [cc]	Minimum weight [lbs]	Engine Displacement [cc]	Minimum weight [lbs]
2500	1625	4300	2795
2600	1690	4400	2860
2700	1755	4500	2925
2800	1820	4600	2990
2900	1885	4700	3055
3000	1950	4800	3120
3100	2015	4900	3185
3200	2080	5000	3250
3300	2145	5100	3315
3400	2210	5200	3380
3500	2275	5300	3445
3600	2340	5400	3510
3700	2405	5500	3575
3800	2470	5600	3640
3900	2535	5700	3705
4000	2600	5800	3770
4100	2665	5900	3835
4200	2730	6000	3900

Unrestricted Category

1. Classification

The Unrestricted Category shall include any cars which are suitable for racing, but which do not conform to the preparation rules of the listed MCSCC categories. These may be cars conforming to the preparation regulations of the other U.S. or International sanctioning bodies. Additionally, cars which do conform to the preparation rules for a listed MCSCC class may enter as Unrestricted in another race group.

2. Fuel

There are no restrictions on types of fuels, or blends, in this category, except that Nitro Methane or any other fuels which present exceptional danger in handling are not allowed.

3. Requirements

All cars must conform to the requirements listed under ***Automobiles – General Regulatios***. In addition, the car's construction shall meet the approval of the Chief Technical Inspector. Additional safety equipment (i.e. roll cage, fuel cell) may be required where the car's performance potential warrants.

4. Designation

At any given event, an unrestricted category shall run with the race group most appropriate for its configuration and performance. Thus, different unrestricted cars may race with different race groups. The class designation displayed on the side of the car shall be "UNR".

5. Championship Points

The provision of this category shall not be constructed as encouraging the construction or modification of cars beyond the specifications of the various standard Midwestern Council categories. Cars running in this category will not be awarded MCSCC championship points, but may be awarded event trophies at the discretion of the sponsoring club.

Vintage/Historic

Vintage/Historic Racing

1. Background

The racing lineage of the Midwestern Council extends back to 1930 with the founding of the MG Car Club in Abingdon, England. In the early 1950's, the Midwestern Center of the Overseas MG Car Club linked sub-centers in Milwaukee, Kenosha, Racing, Chicago, Rockford, and Detroit to coordinate competition events. In 1958, the Midwestern Council of Sports Car Clubs was formed. Every year since has seen 10 to 14 wheel-to-wheel race events, several drivers schools, and recently, autocrosses and high speed touring events on the Council schedule. Safety has always been paramount, and the combination of thorough driver training, tough stewarding and sensible competition has given the group over thirty seasons of racing with serious injury accidents countable on the fingers of one hand.

2. Introduction

Midwestern Council Vintage/Historic (MCVH) events are intended to provide the enjoyment of racing the older cars, as opposed to the all out contest for victory. MCVH racing is designed for sports cars raced before slick racing tires became standard equipment on road racing cars. MCSCC Vintage Races are competitive events that will be run with safety for the car and driver as foremost considerations. Total control and good sportsmanship are expected at all times.

3. Rules of the Road

MCSCC Vintage Racing shall follow all of the Rules of the Road listed in the current GCR and the following:

3.1 MCSCC Vintage/Historic Races are open only to drivers holding current racing privileges with MCSCC, SCCA, VSCDA, SVRA, VMC or other approved racing organization. MCSCC may require additional credentials for drivers of certain high powered cars. Exhibition sections may have different driver qualification requirements.

3.2 Any driver who spins on or off course, or drives four (4) wheels off course and out of control during practice or qualifying, will be black flagged and must pull into the pit lane on the next lap for consultation with a steward. During a race, driver will receive a furled black flag as a warning; repeated instance(s) of erratic driving will cause a black flag for the offending driver.

3.3 Any driver that is at fault in an accident which causes damage to any car including his/her own, will be disqualified immediately from competition for that event, barred from the next event and on probation for 13 months. Any further incident while on probation will result in the suspension of license for 13 months.

4. Safety

All drivers of automobiles in Vintage/Historic classes must meet the minimal Safety Equipment listed in this GCR.

5. General Regulations

5.1 To compete in a MCVH event, cars shall meet the following requirements as well as the specifications of the class and category in which they are entered. To be eligible, cars must have been built in and prepared to 1989 or prior specifications. In general, production cars with relocated suspension, tube frames, extensive air dams, and other devices not commonly used before the mid-1970 are not eligible. Other cars of special interest of historic significance may be eligible.

5.2 Fuel

All cars shall use pump fuel, defined as any grade of gasoline. Gasoline may contain antioxidants, metal deactivators, corrosion inhibitors and lead alkali compounds such as tetra-ethyl lead. Oxygen and/or nitrogen bearing compounds are prohibited.

5.3 Identification Marks

Each automobile shall carry identification numbers and class designations. Numbers shall be placed on the front, back, and both sides of the automobile and shall meet the approval of Timing & Scoring. All cars except Formula cars must have legible rear numbers. Metallic letters and numbers are not allowed. All automobiles shall carry numbers at least 8 inches high with a 1-1/2 inch stroke on a contrasting background.

5.4 Advertisement on Automobiles

Advertising may be displayed on automobiles provided they are in good taste, and do not interfere with identification marks.

5.5 Mechanical Conditions of Automobiles

The Chief Technical and Safety Inspector for MCVH shall have the responsibility for inspecting and certifying every automobile before it is allowed to take part in a practice or competition. An automobile which is disapproved or which is driven in a practice or competition, or which is presented for recheck without the corrections specified by the Chief Technical and Safety Inspector may be disqualified from the event Automobiles which have been altered or damaged after they have been approved at Technical and Safety Inspection shall be subject to reinspection and approval. In the case of an automobile suffering chassis or suspension damage sufficiently severe as to prevent continued participation in the event, a notation of the damage shall be entered in the Vehicle Log Book. All major body components such as front and rear hoods, fenders, doors, and windscreens must be maintained in normal position throughout the competitions.

5.6 Technical and Safety Inspection

5.6.1 The Chief Technical Inspector of the MCVH program will report to the Chief Steward of the Event any automobiles that do not conform with the requirements of the GCR.

5.6.2 **Appearance** – Neat and Clean. Specifically, automobiles that are dirty either externally or in the engine and passenger compartments, or that show bodywork damage, or that are partially or totally primer, or have not undergone proper repairs after damage shall not be approved for competition. Loose seat cushions shall be removed or secured. All loose gear in the passenger or storage compartments shall be removed while the vehicle is on the race course.

5.6.3 **Tires** – Treaded tires must be in very good condition, with 2/32" minimum original tread across the entire surface of each tire. Tires should be approximate size and profile (aspect ratio) as raced in Competition Era (See Section 7.4). Slick racing tires allowed only as detailed in TIRES section.

5.6.4 **Brakes** – Shall be in perfect working order.

5.6.5 **Fenders** – Fender skirts and decorative hubcaps shall be removed.

5.6.6 **Exhaust System** – Shall be directed away from the body or chassis.

5.6.7 **Hood and Engine Compartment** – All parts shall be securely fastened.

5.6.8 **Suspension and Steering** – Shall be of suitable design and in proper working order.

5.6.9 **Fuel Tanks** – No leakage of fuel will be tolerated. It is recommended that "Monza"/flip type fuel filler caps be replaced with a standard fuel filler cap. Monza type fuel caps must be wired or taped during any competition event. Safety Fuel Tanks (Fuel Cells) are highly recommended.

5.6.10 **Signal Lights** – Except for Formula cars, all cars shall have operating brake and tail lights. Formula cars shall have an operating running light. Lights on the front of the cars shall be securely taped to prevent loss of glass or plastic.

5.6.11 **Seat Belts** – Seat belts and Shoulder harness must conform to ***Automobiles – General Regulations***.

5.6.12 **Roll Bars** – Each vehicle must be equipped with a roll bar. The following specifications are mandatory and represent the minimum requirements. Specific installations are subject to the approval by the MCVH Chief Technical Inspector. Roll bars must meet or exceed the requirements of Sections ***1***, ***2*** and ***3*** of ***Appendix Z***. Roll bars installed after January 1, 1990 must conform to ***Appendix Z***.

5.6.12.1 **Roll Bar Bracing**

5.6.12.1.1 Roll bar hoops must have at least one fore or one aft brace of tubing dimension at least equal to the minimum dimensions required for the main roll bar hoop.

5.6.12.1.2 The bracing must be placed as near as practical to the top of the roll bar hoop, but must attach in the upper one third (1/3) of the roll bar hoop.

5.6.12.1.3 If the fore/aft braces are removable it must meet the requirements of ***Appendix Z***.

5.6.13 **Roll Bar Mounting Plates**: Roll bars and braces should be attached to the frame of the car whenever possible. Mounting plates must be of 3/16" steel construction and distribute the load over as large an area as possible. It is recommended that each plate be a minimum of 12 square inches.

5.7 **Convertible Tops** – Convertible tops, Targa tops, removable sun roofs, removable T-tops, and detachable hardtops shall be removed or down and secured while the vehicle is on the race course. Tonneau covers may not cover the passenger seats but may cover the convertible top and boot.

5.8 **Fire Wall and Floor** - Shall prevent the passage of flame and debris to the drivers' compartment.

5.9 **Mirrors** – Shall provide the driver visibility to the rear of both sides of the car.

5.10 **Fire Extinguisher** – Shall be a dry chemical or Halon 1301 or 1211 type with the following minimum capacities.

5.10.1.1 Dry chemical: 2 pounds, 10BC Underwriters Laboratory (UL) rating (potassium bicarbonate – Purple K) recommended or 1A10BC UL rating multipurpose (ammonium phosphate and barium sulfate).

5.10.1.2 Halon 1301 or 1211: minimum 5 pounds capacity for in-car integrated installations (manual or automatic release). Except for in-car integrated installations, fire extinguishers shall be securely mounted in the cockpit. All mounting brackets must be of metal construction. In the case of hand-held manual operation units, this metal mounting bracket must be of the quick release type. On Formula cars, fire extinguishers may be mounted in an accessible location outside the cockpit.

5.11 **Garments** – Flame-resistant garments, crash helmets, goggles, or face shields shall be approved at safety inspection and may also be checked at the starting grid.

5.12 **Leakage** – No leakage of any fluid will be tolerated. Catch cans are recommended on all fluid vents.

5.13 **Windows** – Removable side curtains shall be removed while the vehicle is on the race course. Convertibles shall have all windows lowered while on the race course. Sedan cars shall have the drivers' and passenger windows lowered while the vehicle is on the race course.

5.14 Window nets or arm restraints required on all vehicles.

6. Tires

All vintage classed automobiles shall run on treaded tires, except those cars built specifically for racing (Non-Production) between 1971 and 1975, inclusive. The responsibility lies with the competitor to prove that a car running on slick tires is eligible to do so. Formula Ford and Formula Vee automobiles must run treaded tires.

7. Licenses

MCVH races are open only to drivers holding a competition license from MCSCC, SCCA, VSCDA, SVRA, or other approved racing organization. MCSCC may require additional driving credentials for drivers of certain high powered automobiles.

8. Points:

1 point will be awarded for each practice session a driver participates in at an event.
1 point will be awarded for each qualifying session a driver participates in at an event.
1 point will be awarded for each race a driver starts.
2 points will be awarded for each race a driver completes.
One event will be dropped from the point total to determine the overall points for the year. For example, if there are seven events, only the best six will count towards the season's total points.
If a driver competes in all the events after one event is dropped, that driver will get 5 bonus points.
To be eligible for points, a driver must be a member of Midwestern Council.

The distribution of points rewards reliability and participation rather than overall finishing positions and will be used to select a vintage driver of the year.

High Speed Autocross (HSAX)

The Midwestern Council HSAX Story

HSAX Background

Roaring down a curvy road, wheel to wheel, you blast down long straights, then hard on the brakes, hook into the turns…just you, your car, and the competition. That's what road racing is like! The Midwestern Council of Sports Car Clubs has found a niche for itself as well as a national reputation for its highly competitive programs and members.

Originally run on private estates and closed-off public roads in the 40's and early 50's, amateur road racing has moved to closed circuit tracks. In 1958, a number of racing clubs found that rising insurance and track rental costs were making individual club racing programs prohibitively expensive. They joined together to form the Midwestern Council of Sports Car Clubs to set competition and licensing procedures and to coordinate race dates in order to facilitate the participation by the drivers of all member clubs. Today, although the club count has risen to 7 with over 800 members spread throughout the Midwest, the structure of the Council is still basically one of the autonomous individual clubs joined together in motor sports programs.

Acting as a regulating and coordinating body, the Council sanctions between 10 and 14 events annually, most sponsored by individual clubs. The Council itself runs two Driver School sessions each year where new Wheel to Wheel drivers are trained, tested, and observed in on-track situations before qualifying for Novice Competition Licenses. The Council issues three levels of Wheel to Wheel licenses: Temporary Permit (for Driver School), Novice License (upon satisfactory completion of Driver School), and Full Competition License. Full Competition License holders can also seek to qualify for Instructor Certification to teach at Driver Schools. HSAX schools are similar to Wheel to Wheel schools but do not require a license.

All cars participating in events sanctioned by the Midwestern Council must meet strict regulations for safety and race worthiness. Wheel to Wheel Drivers are also required to wear helmet, suit, shoes and gloves, which meet strict standards for safety and fire protection. These safety requirements, thorough pre-race tech inspections, extensive track side safety equipment, combines with the Council's Driver School program, produce one of the finest safety records in motor sports today.

HSAX Story

In more recent years, the Midwestern Council has adopted a new program for motor sports enthusiasts. High Speed Autocrossing (HSAX) enables those who don't want door-to-door competition a place to test their driving skills without having to go through the expense and time dedication road racing requires. Competitors use their own street cars and compete on a race course against the clock. Four different groups divide the level of preparation of the cars in the HSAX group from stock to race prepared cars. If you with the thrill and excitement of racing but cannot afford with commitment of door-to-door racing, HSAX has what you are looking for. HSAX drivers are required to wear Helmet, closed toe shoes, long sleeved shirt and pants.

The Street Tire Class (STC) is the latest subclass to be included in the HSAX program. The STC has the classifications arranged by engine displacement rather than by modifications. This allows Tuner Cars and other cars to race on street tires with other modifications being allowed as defined by class rules.

The Midwestern Council of Sports Car Clubs is registered as a not-for-profit corporation in the State of Illinois.

High Speed Autocross (HSAX) General Conditions and Rules:

1. General Regulations

The rules and regulations set forth herein are designed for the orderly conduct of High Speed Autocross events and to establish minimum acceptable requirements for such events. These rules shall govern the condition of all Midwestern Council of Sports Car Clubs (MCSCC) events. By participating in these events, all participants are deemed to have complied with these rules and regulations. They are intended as a guide for the conduct of the sport and are in no way a guarantee against injury or death to participants, spectators, guests, or others.

1.1 The Contest Board, having promulgated these regulations, may modify, add to, delete from, or grant exceptions to these regulations at any time.

1.2 The event supplemental regulations for each event supersede the rules written in the MC General Competition Rules for that event ONLY.

1.3 The Contest Board reserves the right to prevent any entrant from participating in any MCSCC event. Likewise, the Chief Steward of the Event may prevent an entrant from participating in any MCSCC event. The event Chairman shall be responsible only for the administrative functions relative to planning, organizing, and running of the event. The Chief Steward of the Event shall have finally authority over the safety and general conduct of the event, pertaining to competitive matters, rules, regulations, interpretations, etc.

1.4 It shall be the responsibility of all participants to conduct themselves in a manner which is not prejudicial to the interest of the MCSCC or bring unnecessary criticism to the MCSCC.

1.5 The Chief Steward of the event is the final authority for the general conduct of the event in accordance with these rules and the supplementary regulations for the event.

1.6 The Contest Board reserves the right to postpone or cancel any scheduled event.

1.7 The participant, in signing the entry form for any MCSCC event, elects to use the course of the event at his or her own risk, and thereby releases and forever discharges the MCSCC, together with its heirs, assigns, officers, representatives, agents, officials, employees, and others for death or any injury to body and/or reputation, that may be received by said participant, and for all claims of said injuries to parties listed above growing out of, or resulting from the event contemplated under the entry form, or caused by any construction or condition of the course over which the event is held.

1.8 By the mere fact of entering a MCSCC event, every participants or guest agrees to abide by the regulations and the supplementary regulations pertaining to that event, and recognizes as the only authority the Chief Steward of the Event, the Competition Director of the MCSCC, and above these, the Contest Board of the MCSCC.

1.9 Only officials may use motorcycles, mini-bikes, etc., in the paddock area.

1.10 Riding on the exterior bodywork on vehicles in the paddock is prohibited.

1.11 Only qualified instructors, as approved by the Contest Board, may ride as a passenger in any entered vehicle on the track.

1.12 Drivers are responsible for the conduct of their guests and crew.

1.13 Fees for each points event sanctioned by Midwestern Council, where Midwestern Council is not the primary sponsor, shall be paid to the Council by the Club sponsoring said events due 30 days after the completion of the points event.

1.13.1 Fees:

Sanction Fee	$12 per entry per event

2. Event Insurance

Insurance for the event shall meet the minimum requirements as established by the MCSCC Board.

3. Eligibility of Participants

Anyone age sixteen (16) or older with a valid driver's license from their state of residence and with an acceptable vehicle can compete.

3.1 Sixteen (16) and Seventeen (17) year olds may apply for a Minor HSAX Driver School Permit providing all Minor applicant criteria have been met.

3.2 All 16 and 17year old participants in HSAX must successfully complete a full day MC Driver School. Driver School requirement may be waived by the Competition Director with an acceptable racing resume. Upon successfully completing a Driver School, a HSAX Minor Participation Certificate (HSAX MPC) will be issued.

3.3 A "**MINOR RELEASE AND WAIVER OF LIABILITY AND INDEMNITY AGREEMENT**" (Minor Release) form must be signed by both living Parents or Legal Guardians, **notarized** and in the possession of the MC Competition Director 14 days prior to a 16 or 17 year old being allowed to participate in a Midwestern Council event. To receive a blank Minor Release, the applicant must join a MCSCC club and contact the Steward of the club he/she joins. Notarized releases are valid until December 31st of the year in which they are signed and must be submitted each year until the minor attains 18 years of age. The Competition Director will supply copies of this form to the MC President and Competition Licensing Director. A copy of the notarized form will be provided to each event Chief Steward and Registrar for signature comparison of the form that will be completed by the minor and attending parent/guardian at the events entered.

3.4 At registration of each event entered, a Minor Release for that event shall be filled out and signed by the minor and attending parent/guardian. (Only one parent/guardian need attend events.) The registrar will compare the signatures to those on the copied notarized form. If believed to be the same, the registrar is to sign and date the event release as a witness.

3.5 **<u>If at any time the attending parent/guardian intends to leave the track property, that parent/guardian is to inform the Chief Steward of intent to leave. Upon returning, the parent/guardian is to report to the Chief Steward. While the parent/guardian is away, the minor will not be allowed in restricted areas.</u>**

3.6 While holding an HSAX Minor Participation Certificate the participant shall conform to all regulations for both Novice and Probation licenses as detailed in the GCR. In addition, the driver must personally present the MPL to the event Chief Steward accompanied by the attending parent/guardian. Renewal of an HSAX MPC is similar to that of a Novice license. HSAX Minor Participation Certificates are to be sent to the Competition License Director for second year renewal as would the MPL.

4. Instructor Certification

4.1 **Eligibility**: An applicant for HSAX Certification shall:

4.1.1 Be age eighteen (18) or older.

4.1.2 Be a current regular member of a MCSCC club.

4.1.3 Have a valid driver's license from their state of residence.

4.1.4 Have competed in at least six (6) MCSCC sanctioned events within the previous two full competition years, one of the events may be a Full Day Autocross School.

4.2 **Requirements:** An applicant for HSAX Certification shall:

4.2.1 Have received a HSAX Instructor log book and logged their experience as an Assistant Instructor.

4.2.2 Provide a written resume of racing experience to the Autocross Committee.

4.2.2.1 The Autocross Committee is to include the Autocross Director and Lead Autocross Instructor.

4.2.3 Have been an Assistant Instructor in at least five (5) MCSCC sanctioned events consisting of any of the following:

4.2.3.1 A MCSCC sanctioned High Speed Autocross competition event.

4.2.3.2 A MCSCC sponsored full day Autocross School.

4.2.3.3 Volunteering for a full day as an Assistant Autocross Instructor at an MCSCC full day Autocross School shall count as two events towards certification.

4.2.3.4 Or at the unanimous approval of the Autocross Committee.

4.3 **Approval:** The MCSCC Contest Board shall approve or reject all candidates for HSAX Instructor.

4.3.1 The Autocross Director shall (at any MCSCC Board Meeting) present a list of candidates recommended by the Autocross Committee for MCSCC HSAX Instructor certification. The MCSCC B.O.D shall approve or reject all candidates for MCSCC certified HSAX Instructor.

4.3.2 The names and MCSCC club affiliation of newly (approved) certified HSAX Instructors shall be published in the Klaxon.

4.4 **Renewal**: Instructor certification does not expire, but will be reviewed annually by the Autocross Committee who will remove the names of Instructors who are no longer active with MCSCC and will report all changes to the MCSCC BOD.

5. Technical Inspection

5.1 **Entrant Responsibility:** Entrants are responsible for proper classification and points assessments for cars. Technical inspectors can verify proper classification of each vehicle. Inspectors will check the entrants' verification of safety related items per the Midwestern Council Technical Inspection Sheet for High Speed Autocross events. These items include, but are not limited to:

5.1.1 Adequate brake pedal, brake fluid level, wheel bearing play, empty trunk (all loose items must be removed), no leaking fluids, lug nuts present and torqued properly, tire tread depth, hot battery post covered and/or taped, operating brake lights.

5.1.2 All trim rings, hub caps, or decorative wheel accessories which are not firmly attached to wheels with threaded fasteners or safety wire shall be removed prior to technical inspection and competition.

5.2 **Annual Inspection:** Entrants are eligible to receive an annual inspection that allows the entrant to forgo the event inspection unless noted by the Supplemental Regulations. The annual inspection will include but not be limited to the criteria specified in 5.1.1 and 5.1.2. Entrants will be given a sticker by the inspector showing completion of the annual inspection which must remain visible and accessible throughout the remainder of the season. The following items must be proven to qualify for an annual inspection:

5.2.1 Entrant must be a current member of a Midwestern Council club.

5.2.2 Entrant must have participated in at least five (5) Midwestern Council sanctioned HSAX events within the past two years.

5.2.3 Annual tech is subject to revocation at the discretion of the HSAX Chief Technical Inspector or the Chief Steward of the event.

6. Identification Marks

6.1 Each vehicle shall carry an Identification Number, Class and Category letters, Practice Group number and other marks are as required by the Supplemental Regulations, and shall meet the approval of the Chief of Timing and Scoring. Identification Numbers used shall be restricted to one, two, or three digits. The first digit of a three digit number may not be zero.

6.2 The Identification Number shall be displayed on the front and on both sides of the vehicle so that it is legible. The class and category the vehicle is competing in shall be displayed on the front of the vehicle. All of these markings shall be at least 6 inches high with a 1 inch stroke on a contrasting background.

6.3 **Practice Group Identification Marks**

6.3.1 The group marking need only be displayed on the front of the car, preferably on the windshield. The marking should be approximately 70 percent of the size of the identification number and on a contrasting background.

6.3.2 There are nine possible practice groups, 1 through 9. Each group will have a published 'best lap time' associated with it. Competitors should put themselves in the group that best corresponds to their best lap time. If a competitor has no experience racing with Midwestern Council or the specific race track, they shall be placed in the Novice Group.

6.4 It is highly recommended that any numbers or letters placed on the windshield or side glass shall be white in color. The use of shoe polish is not allowed.

7. Safety Equipment

7.1 Helmets

Helmets must be approved by the Snell Foundation or SFI and carry the current issued Snell Special Application (SA) or Motorcycle (M) sticker/decal or the previous issued Snell Special Application or Motorcycle sticker/ decal (e.g. If the most current Snell rating is K2010, M2010 and SA2010, helmets with the K2005, M2005, and SA2005 Snell sticker/ decal may be used), or helmets approved by the SFI with a SFI sticker 31.1A or 41.1A for open faced helmets and with a SFI sticker 31.2A or 41.2A for closed faced helmets. The most current Snell Foundation Special Application rating will become effective on January 1 of the following year, after helmets are readily available for retail sale.

7.1.1 It is highly recommended that helmets have the Snell SA, M, or K rating of 2005, or later.

7.1.2 Drivers of open cars shall wear goggles or face shields. It is highly recommended that all drivers equip themselves with full coverage helmets.

7.1.3 No loaner helmets will be made available by the MCSCC.

7.2 Apparel

Drivers and instructors shall wear:

7.2.1 Long sleeve shirts and full length pants consisting of natural fibers. It is recommended that drivers and instructors wear one-piece flame retardant driving suits, a fire-resistant head sock, a fire-resistant driver's suit, and full-backed, non-perforated, fire-resistant gloves.

7.2.2 Closed, full-toed shoes.

7.3 Roll Bars or Roll Cages

Roll bars or roll cages are required in all convertible, roadster, and open vehicles even if a removable hardtop is attached. Roll bars or roll cages are required in vehicles with a targa top or "T" top competing without tops secured in place. Roll bars or roll cages are required in vehicles with cloth-covered targa, "T" tops, or sun roof openings. Convertible tops shall be secured in the "top down" position with a tightly fastened cover or strap during on-track sessions. Vehicles fitted with "T" tops, targa tops, or sun roofs, which consist of metal, fiberglass, or safety glass, or a combination of these materials, may compete without a roll bar/cage. The top panels must be fully closed and securely fastened. Roll bars/cages meeting the requirements of ***Appendix Z/ ZZ*** are highly recommended for all cars competing in MCSCC Autocross events.

7.3.1 For vehicles that require them, roll bars shall be constructed and installed as mandated in ***Appendix Z*** of the current GCR. As an alternative to roll bars, vehicles may include a roll cage. The construction and installation of roll cages, if used, shall conform to ***Appendix ZZ***.

7.3.2 Vehicles with Roll bars or roll cages installed will not be assessed points for chassis stiffening. Removal of the rear seat or other interior panels for installation of the roll bar or roll cage will not be considered as weight reduction penalties.

7.3.3 Factory "roll bars" are acceptable only if they are designated by the manufacturer as rollover protection and meet the height and other requirements of Appendix Z. Competitors must provide "Manufacturers Documentation" (ie: Service Manual, build sheet, etc.) stating the vehicles make, model and year has factory designed and installed "rollover protection".

7.4 Seatbelts and Harness Rules

The seat belts and harness system shall be in perfect condition and may be the factory configuration. Any harness or restraint system, other than the factory configuration, shall conform to the *harness system* manufacturer's specified installation. The use of any lap belt without shoulder restraint is prohibited. It is strongly recommended that all competitors utilize a harness system whose construction and installation conforms to section ***7.4.1.*** Drivers competing in a vehicle equipped with a roll bar or roll cage, shall use an upgraded harness system with SFI or FIA certification. It is recommended that cars using an upgraded harness system also replace the driver's seat with a racing type seat. Vehicles competing with an upgraded system and a racing type seat will not be assessed points for replacement of the driver's seat

7.4.1 Aftermarket harness specification: Lap belt and harness systems shall consist of a positive locking single release system. Two separate straps are preferable to a Y-type harness. If two separate straps are used, it is permissible to use separate or common mounting points. If a common mounting point is used, it must be at least six (6) inches behind the driver's neck. In single seat vehicles, and those with bucket seats providing lateral support for chest and upper torso, mounting points may be located directly behind the seat back. The belts/straps shall be nylon or Dacron polyester of at least two (2) inch nominal width. The intent of this rule is to allow existing commercially available "harness systems" that are improvements over standard OEM seat and lap belt systems such as, or similar to, Schroth. All lap belt and harness systems must be installed according to the manufacturer's instructions. If the lap belt and harness system manufacturer does not provide installation instructions, then the lap belt and harness system shall be installed according to the published recommendations of Simpson Race Products for similar belts.

7.4.2 Drivers competing in vehicles other than race classes or vehicles which require roll bars or roll cages, shall utilize a snug fitting seat and shoulder belt combination. Original equipment manufacturers (OEM) installations are typically acceptable.

7.4.3 Drivers competing in vehicles which require roll bars or roll cages shall utilize a lap belt and shoulder harness system with construction and installation conforming to ***7.4.1***

7.4.4 Instructors riding in vehicles and harness systems

7.4.4.1 Instructors riding in vehicles within any class/category, excluding vehicles that require roll bars or roll cages, shall utilize a snug fitting seat and shoulder belt combination. Original equipment manufacturers (OEM) installations are typically acceptable.

7.4.4.2 Instructors riding in vehicles that require roll bars or roll cages shall utilize a lap belt and shoulder harness system with construction and installation conforming to ***7.4.1***

7.5 **Windows**: Vehicles on the track during practice sessions and timed runs shall have both front side windows fully open. All other windows shall be fully closed.

7.6 **Window Nets**: Window nets are highly recommended in all modified category and race category vehicles.

7.7 **Arm Restraints**: Arm restraints shall be used on all open cars. It is highly recommended that all drivers utilize arm restraints.

7.8 **Tow Points**: All cars which have a removable tow eye hook are required to have the tow eye installed in place or present in the vehicle while on the track.

8. Fuels

8.1 Nitrous Oxide use will not be allowed in any class/ category; bottles must be removed from the vehicle if installations exist.

8.2 Electric vehicles are prohibited at Blackhawk Farms Raceway. They may be considered at other tracks with Chief Steward approval pending track specific regulations.

8.3 Hybrid vehicles may be considered with Chief Steward approval pending track specific regulations.

9. Course Rules, Scoring, Trophies, Series Championship.

9.1 Course Rules:

9.1.1 If a competitor's vehicle has three or more wheels off of the track's paved surface during a timed run, or spins more than 90 degrees during a timed run, then that timed run shall be forfeited and no time shall be counted toward the competitor's best time of the day.

9.1.2 Furthermore, if a driver executes a pass outside of the designated passing area during practice, then he/she shall lose one timed run, i.e., will not be permitted to take one timed run.

9.2 Scoring

At each event, series points are awarded based on a numerator/denominator formula, with the best time of the fastest competitor in each category/class being divided by each successive competitor's fastest run in the same category/class. Points will by computed to the nearest 1/100th of a point. For example, the fastest time in CS is 1:30.00 and the second fastest competitor's time in CS is 1:32.67. The fastest time in a category/class, in this case CS, is always 1000.00 points. The second place competitor's points earned is 1:30.00 / 1:32.67 or 1.5000/ 1.5445 or 971.19. Should a competitor fail to obtain a bona fide timed run due to a mechanical failure or DNF's, and no refund was made for his/her entry, then he/she shall score 2 points.

9.3 Trophies

At each event trophies will be awarded to the top thirty (30) percent of each category/ class. Additional trophies may be awarded at the discretion of the sponsoring club.

9.4 Series Championship

9.4.1 Points earned in one category/ class cannot be combined or transferred with those earned in another category/ class.

9.4.2 If there are three events scheduled for the year, points from all events will be counted toward the Series Championship. If there are four or more events scheduled for the year, the best points from one fewer than the number of events per year will be counted.

9.4.3 To be eligible for a Series Championship an entrant must:

9.4.3.1 Be a member of MCSCC.

9.4.3.2 Have a HSAX ID number and register for the event with that ID.

9.4.3.3 Have run in at least 51% of the events in the series and within the same category/class of competition.

9.4.4 If a competitor becomes a member of MCSCC during the year and after one or more events have been held, points earned in the previous event prior to membership will be credited.

9.4.5 All Series Championship winners will receive a year-end trophy and a complimentary dinner at the annual MCSCC Awards Banquet.

10. Protests

10.1 **Protest Settlement**: If a protest is filed at an event, a protest committee of three (3) Autocross Committee members or members designated by the chief steward of the event will meet at the event to settle the protest. None of the members

meeting shall be competing in the category/class of the subject protest or a club member of the protesting or protested competitor. The final decision of the protest rests with the Chief Steward of the event.

10.2 **Classification of Your Own Vehicle**: If the entrant feels that his/her vehicle is in the wrong class, the appeal to reclassify the vehicle must be made with the Chief Steward of the Event fifteen (15) minutes prior to the entrant's last timed run. All reclassification will be based on the vehicle's potential performance rather than the entrant's times.

10.3 **Classification of a Competitors Vehicle**: Drivers taking part in a competition may only protest a car in the same class. To protest a competitor's vehicle, the protest must be filed in writing with the Chief Steward of the Event at least fifteen (15) minutes prior to the competitor's last timed run. All classification protests must be based on the vehicle's potential performance rather than the competitor's times.

10.4 **Preparation of a Competitors Vehicle**: Drivers taking part in a competition may only protest a car in the same class. All protests regarding the preparation of a competitor's vehicle must be specific and filed in writing with the Chief Steward of the event (e-mail accepted) and must be accompanied by a $50 protest fee sixty (60) minutes prior to the competitor's last timed run. If the protest fails the fee will be forfeited to the Midwestern Council and added to the Sanction Fee fund. If a complete mechanical disassembly is required, the cost for the inspection, disassembly and re-assembly is to be borne by the protestor if the protest is disallowed; and, by the protested competitor if the protest is upheld.

10.5 **Timing and Scoring**: Protest relating to Timing and Scoring must be made in writing to the event Chief Steward within 15 minutes of the final results being posted and prior to the trophy presentation.

10.6 **Deadline**: No protests relating to vehicle classification (Subsections ***10.2*** and ***10.3***) or preparation (Subsection ***10.4***) will be heard after the final results are posted prior to the trophy presentation.

11. Class/Category of Entry

11.1 An entrant may elect to run in more than one class/ category in one or more vehicles (one entry fee per entrant, per vehicle, per class/ category). However, an entrant is allowed only one entry per class/ category, per event.

HSAX Points Based Competition Rules

1. Class/Category

1.1 Class

1.1.1 Refer to the Midwestern Council High Speed Autocross Classification List for class information.

1.1.2 It is the entrant's responsibility to insure that his/her vehicle is listed in the Midwestern Council High Speed Autocross Classification List by written application to the High Speed Autocross Committee. Any vehicle that is not listed in the Classification List will temporarily be placed in a class for the event by the Chief Autocross Technical Inspector. If the vehicle is later officially classified to a different class, points earned from the event will be voided. The points will not be transferred to another class.

1.1.3 Only vehicles produced for sale in the U.S.A at the time of their manufacture will be classified as Stock, Prepared, or Modified. Any kit cars and vehicles not available for sale in the U.S.A at the time of their manufacture, will be classified in the appropriate Race or Street Tire class.

1.2 The entrant shall compete in the class/ category as determined by the vehicle classification list and point assessment schedule except that the entrant has the option to compete and earn points in a faster class/ category. The entrant may choose to compete in a faster class/ category by electing either ***1.2.1*** or ***1.2.2*** but not a combination of the two:

1.2.1 The entrant may volunteer to the technical inspector any point assessment total which is greater than that assessed at tech (i.e., same class, faster category).

1.2.2 The entrant may volunteer to bump into a faster class, using the point assessment total as assessed at tech for the vehicles original class listing (i.e., faster class, same category).

1.3 The entrant shall inform the technical inspector during inspection if he/she elects to move into a faster class/ category.

1.4 Category

1.4.1 Determination for category is based on Section ***6***, Point Assessment Schedule.

1.4.2 Three main categories are used in the High Speed Autocross Series. These categories are:

1.4.2.1 **Stock Category**: There are seven (7) stock classes; YS (Y Stock), XS, AS, BS, CS, DS, ES.

1.4.2.2 **Prepared Category**: There are seven (7) prepared classes; YP (Y Prepared), XP, AP, BP, CP, DP, EP.

1.4.2.3 **Modified Category**: There are seven (7) modified classes; YM (Y Modified), XM, AM, BM, CM, DM, EM.

2. Tires

2.1 In the Stock category only standard production DOT labeled tires are allowed. "Special construction" or "Specialty compound" tires are not allowed in the Stock Category. Tires can be of any size as fitted on stock, replacement, or aftermarket rims (see Point Assessment Schedule for size). Tires must have a minimum of 1/32 inch of tread on 80% of its treaded surface. All tires used in the Stock category must have a minimum tread wear rating of 140 and have a DOT label.

2.2 Racing tires are allowed in prepared, modified and race classes.

2.3 Any tire is subject to disqualification by the Chief Technical Inspector if any visible discrepancy or defect is noted.

3. Suspension Bushings and Shock Absorbers

3.1 Suspension bushings are free on sway bars and shock absorbers **only**.

3.2 Shock absorbers are free. Number and size must remain as factory equipped and mounting locations cannot be changed. If number and size of shocks and/or mounting locations are changed, it will be considered as suspension modifications and points will be assessed. Bushing material is free.

4. Brakes

4.1 Cross drilled or slotted rotors same size as stock are free.

4.2 Brake ducts are free.

4.3 Stainless steel brake lines are free.

4.4 Brake shoes and pads are free.

4.5 Brake conversion is defined as any of the following changes:

4.5.1 A change in brake rotor diameter or thickness

4.5.2 A change in the size or number of brake caliper pistons

4.5.3 A change in brake drum diameter or width

4.5.4 Substitution of drum brakes with disk brakes of any size

5. Updating and Backdating

Cars may be updated and backdated within the specifications of recognized makes and models listed on the same line of Autocross Classification List.

5.1 All engine swaps will be classed in the appropriate Race or Street Tire Class.

6. Point Assessment Schedule

6.1 The point assessment schedule will be used to place a vehicle into the proper category when any modifications are made to the vehicle. **Any addition of a kit/system will be assessed an SPA for each individual component/part added.** "Bumping" of a vehicle will occur when certain modifications are judged to offer a competitive advantage over other vehicles in the prescribed category. Points are assessed at technical inspection for such modifications. The addition of modification points, including Stock Assessment Points (SAP) within the Midwestern Council Autocross Classification List, if any, is used to determine when a vehicle is to be bumped to a higher category:

Point Assessment Schedule

Total Points	Category
0-2	Stays in Stock Category
3-9	Bump to Prepared Category
10-22	Bump to Modified Category
23 and over	Move to Race or Street Tire Class

6.2 Dealer-installed options that are not available from the factory are considered vehicle modifications from the base model. The modifications should be assessed appropriate points as listed in Section ***6.3***.

6.3 Points will be assessed at tech as follows:

Tires, Wheels, and Suspension	
Adjustable non-factory air spring	4
Coil-over addition or kit (additional camber adjustability is allowed)	4
Tires with a wear rating less than 140	3
Change of rim width, per full inch increment of increase over stock	1
Suspension bushing replacement, excluding sway bars and shock absorbers	1
Sway bar revision or addition: Front=1; Rear=1	1,1
Change of spring rate (including modification of stock springs, i.e. cutting off coils)	2
Other/additional suspension modification, including panhard or track bar	2
Camber plates or other alignment hardware enhancement or changes	1
Chassis stiffening (per each system)	2
Brake conversion, including LB1 option	2
Engine	
Engine displacement change (per each 3% increase)	1
Engine swap: all engine swaps will be classed in the appropriate Race or Street Tire Class	
Removal or tampering with emission control device, per device (i.e. Air Pump, EGR)	1
Removal of catalytic converter(s)	1
Intake Manifold change, modification or adaptor	2
Air intake modification (air box) excluding filter element change	1
Camshaft change	2
Valve size change and/or head modifications	2
Port Modification (rotary engine)	4
ECU tunes for Naturally Aspirated Motors for Alternate Fuels (E85)	1
Ignition and/or computer module change (turbo or supercharged engine)	4
Exhaust manifold change (i.e. headers)	1
Open exhaust and/or muffler removal (does not include catalytic converter	2
Exhaust system enhancement (beyond manifold and converter changes) (i.e. Cat back, downpipe)	1
Accessory drive revisions, including underdrive pulleys	1
Turbo/supercharger system modification or replacement: includes any non-"computer" based mod related to boost control; does NOT include engine computer module points	3
Turbocharger or supercharger addition, not including Intercooler	4
Intercooler change or replacement	2
Intercooler addition	3
Other	
Final gear ratio change less than or equal to 20% (from stock or factory-delivered option)	2
Gear ratio change greater than 20% (from stock or factory-delivered option)	3
Limited Slip differential, except exact replacement of stock OEM equipment	2
Replacement of driver's seat with racing seat (Only for vehicles which do not require a lap and shoulder harness)	1
Obvious attempt of weight reduction or weight transfer, i.e., removal of each bumper, removal of or replacement of each body panel, each plexiglas window panel, battery relocation, etc., per modification (first modification = 2, subsequent modifications = 1; maximum = 4)	2,1,4
Addition of non-original aerodynamic device (i.e wing, splitter, airdam) per device=1; (max=2)	1,2
Other points may be assessed by the Chief of Tech for modifications not stated here	(1 point max, per modification)

HSAX Street Tire Class Competition Rules

1. General

1.1 The Street Tire Class is a restricted class meaning that if a vehicle modification is not specifically listed below, it is NOT ALLOWED. Vehicles running in the Street Tire categories must have been series produced with normal road equipment capable of being licensed for normal road use in the United States and normally sold and delivered through the manufacturer's retail sales outlets in the United States.

1.2 All vehicles competing in the Street Tire Categories:

1.2.1 Shall use tires with a tread wear rating of no less than 140 and be DOT approved. Tires shall also have at least 3/32 of tread left on over 80 percent of the surface.

1.2.2 Shall be allowed wheels of any diameter, width, or offset. Wheels must sit within the wheel well opening. The use of body kits/fender flares to accomplish this is approved.

1.2.3 Relocation of the battery or batteries is permitted, but not into the passenger compartment. Longer cables may be substituted to permit relocation. The area behind the rearmost seat is not considered to be within the passenger compartment.

1.2.4 Heating system may be removed.

1.2.5 Dash, carpet, interior panels may be removed, replaced, or modified.

1.2.6 Window glass may be replaced with OEM equivalent.

1.2.7 Shall be allowed changes to the Fuel tank, including the use of a fuel cell. Fuel cells must comply with ***Appendix X***. No additional tanks or reservoirs may be used,

2. Street Restricted

The Class designation for Street Restricted shall be **SR.**

2.1 Authorized Modifications:

2.1.1 Cross Drilled and/or slotted brake rotors with any friction material may be used.

2.1.2 Traction Bars, Panhard Bars and Watts links are allowed.

2.1.3 Seats and seat belts may be replaced, but the number of seating positions and restraints must remain the same as when delivered from the factory.

2.1.4 Air conditioning systems may be removed in part or in whole.

2.1.5 Alternate steering wheels are allowed.

2.1.6 Roll bars/cages are allowed.

2.1.7 Strut braces are free providing they are attached by bolting to the chassis in a factory provided location.

2.1.8 Accelerator, brake, and clutch pedals may be changed.

2.1.9 Air ducts may be fitted to the brakes, provided that they extend in a forward direction only, and that no changes are made in the body/structure for their use.

2.1.10 Shock absorber bump stops may be altered or removed.

2.1.11 Any shock absorbers may be used (this includes adjustable coil-over struts), provided they attach to the original mounting points.

2.1.12 Any spring may be used as long as they maintain factory mounting holes/position.

2.1.13 Camber/caster adjusters must attach to a factory position if used.

2.1.14 Any anti-sway bar is permitted. Bushing material, method of attachment, and locating points are unrestricted. This does not authorize removal of a welded-on part of a sub-frame to accommodate the installation. Components such as anti-roll bars and strut housings which serve dual purposes by also functioning as suspension locators may not be modified in ways which change the suspension geometry or steering geometry, and may not be installed in positions (e.g., upside down) other than that of the original configuration.

2.1.15 Any ignition setting adjustment or system may be used.

2.1.16 The make, model number, and size of the battery may be changed, but not its voltage.

2.1.17 Muffler systems are free, except engine noise must be within event limitations and system must end/terminate no less than 6 inches to the rear of the driver's seat.

2.1.18 Headers, cold air intakes, intake manifolds, injectors, carburetors, and throttle bodies are allowed.

2.1.19 Catalytic converters are not required.

2.1.20 No open exhaust.

2.1.21 Aftermarket limited-slip differentials are allowed.

2.1.22 Sub-frame connectors are allowed. Sub-frame connectors may be bolted or welded.

2.1.23 Additional non-OEM aerodynamic devices (wings, splitters, etc.) are allowed.

2.1.24 Aluminum/lightened flywheels are allowed.

2.1.25 Racing clutches are allowed.

2.1.26 Intercooler Modification or Change in all street tire classes allowing forced induction engines are allowed.

2.1.27 The engine management system parameters and operations may be modified only by the methods listed below. ***These allowances also apply to forced induction cars, except that no changes to standard boost levels, or boost controls are permitted.***

2.1.27.1 Reprogrammed Stock or aftermarket ECU may be used.

2.1.27.2 Electronic components may be installed in line between and engine's sensors and ECU. These components may alter the signal coming from the sensor in order to affect the ECU's operation of the engine management system. Example: Fuel controllers that modify the signal coming from an airflow sensor.

2.1.27.3 Fuel pressure regulators may be replaced.

2.1.27.4 VTEC controllers and other devices may be used which alter the timing of factory standard electronic variable valve timing systems.

2.1.27.5 Boost controllers are not allowed.

2.1.28 Porting/Polishing and valve replacement on stock heads are allowed.

2.1.29 Control arms and suspension bushings can be replaced.

2.1.30 Maximum engine displacement:

Naturally aspirated:	2.5L (OHC engines)
	3.0L (pushrod engines)
Forced Induction:	Not allowed in SR
Rotary Engines (all):	1.5L

3. Street Modified Category

The Class designation for Street Modified shall be **SM.**

3.1 This class is designed for entry-level engine swap cars (parts allowed on these cars must be stock parts from donor vehicle).

3.2 Allowed Modifications:

3.2.1 All Street Restricted modifications are allowed.

3.2.2 Cars may obtain other bolt-on factory parts from other cars of a similar design/platform. Drive-train and related components (induction, ignition, fuel systems, etc.) are restricted to the following limitations:

3.2.2.1 Engine must be from the same manufacturer as the body. (Toyota/Lexus, Nissan/Datsun, Honda/Acura, etc.)

3.2.2.2 These parts must be stock parts obtained from a donor vehicle.

3.2.2.3 Maximum engine displacement:

Forced Induction:	2.5L (OHC engines)
	3.0L (pushrod engines)
Naturally Aspirated:	4.6L

3.2.2.4 Normally Aspirated AWD vehicles are allowed.

3.2.2.5 Forced Induction AWD Cars are not allowed.

3.2.2.6 OEM replacement roof of different material may be used if installed per OEM original specifications.

4. Super Street Category

The Class designation for Street Restricted shall be **SS.**

This category provides a natural competition outlet for auto enthusiasts using affordable automobiles equipped with common suspension, engine, and appearance modifications which are fully legal and compatible for street use anywhere in the country. This class is designed for the enthusiast that wants to modify their engine swap or O.E. outfitted automobile in the guidelines listed below.

4.1 Authorized Modifications:

4.1.1 All Restricted Street Modifications are allowed.

4.1.2 All Street Modified modifications are allowed.

4.1.3 Bumper braces/supports may be removed or replaced by a lighter replacement. If using a lighter replacement it must retain factory mounting location.

4.2 Brakes

4.2.1 Conversion brake kits are allowed as long as they retain original mounting points (i.e., AEM, Baer, and Wilwood).

4.3 Engine and Drive Train

4.3.1 Allowed: Driveline/Engine modifications:

4.3.1.1 Camshaft replacement.

4.3.1.2 Accessory belt under-drive pulleys.

4.3.1.3 Stock turbocharger must be retained. Blow-off valves may be changed or modified.

4.3.1.4 Maximum engine displacement:

Forced Induction:	3.0L (OHC engines)
	4.0L (pushrod engines)
Naturally aspirated:	8.3L
Rotary engines (all):	1.5

4.3.1.5 Normally aspirated AWD vehicles are allowed.

4.3.1.6 Forced Induction AWD Cars are not allowed.

4.3.1.7 Boost levels may be modified.

4.3.1.8 Aftermarket Block and Heads may be used for Naturally Aspirated Motors.

5. Street AWD class

The Class designation for Street AWD shall be **SA.**

This category provides a natural competition outlet for auto enthusiasts using affordable automobiles equipped with common suspension, engine, and appearance modifications which are fully legal and compatible for street use anywhere in the country. This class is designed for the enthusiast that wants to modify their engine swap or O.E. outfitted automobile in the guidelines listed below, **this class is for turbo and supercharged AWD cars.**

5.1 Authorized Modifications:

5.1.1 All Restricted Street Modifications are allowed.

5.1.2 All Street Modified modifications are allowed.

5.1.3 Bumper braces/supports may be removed or replaced by a lighter replacement. If using a lighter replacement it must retain factory mounting location.

5.2 Brakes

5.2.1 Conversion brake kits are allowed as long as they retain original mounting points (i.e., AEM, Baer, and Wilwood).

5.3 Engine and Drive Train

5.3.1 Allowed: Driveline/Engine modifications:

5.3.1.1 Camshaft replacement.

5.3.1.2 Accessory belt under-drive pulleys.

5.3.1.3 Stock turbocharger must be retained. Blow-off valves may be changed or modified.

5.3.1.4 Boost levels may be modified.

5.3.1.5 Maximum engine displacement:

Forced Induction:	4.0L (OHC engines)
	4.0L (pushrod engines)

6. Street Unlimited Category

The Class designation for Street Unlimited shall be **SU.** Engine displacement is unrestricted.

6.1 Allowed Modifications:

6.1.1 All Street Restricted modifications are allowed.

6.1.2 All Street Modified modifications are allowed.

6.1.3 All Super Street modifications are allowed.

6.1.4 Drive-train and related components are unrestricted.

6.1.5 Brakes are unrestricted.

6.1.6 Roll cages/bars may be bolted or welded.

6.1.7 Front and Rear passenger seat(s) may be removed.

6.1.8 Dashboard may be modified or replaced.

6.1.9 Side and rear windows may be replaced by non-OEM materials.

6.1.10 All Street AWD modifications are allowed.

HSAX Race Class Competition Rules

1. Race Class

There are five (5) race categories;

1.1 **AR**: Closed wheel vehicles with engines 2.95L and over, or with supercharged/turbocharged engines 1.95L and over.

1.2 **BR**: Closed wheel vehicles with engines over 1.95L and under 2.95L, and any supercharged/turbocharged engine less than 1.95L.

1.3 **CR**: Closed wheel vehicles with an engine less than 1.95L

1.4 **DR**: Open wheel vehicles with 1600cc engine and over.

1.5 **ER**: Open wheel vehicles with up to 1600cc engines.

1.5.1 Sports racers will be classified as open wheel vehicles.

1.5.2 Sports Renault will be classified as ER.

1.5.3 Rotary motors will be considered to have a displacement 1.8 times their actual displacement.

1.6 In the Race class any tire is allowed.

1.7 An entrant in AR, DR, or ER must compete in the assigned class/category.

1.8 All Cars Designed as a Single Seat Vehicle with Wheels outside the main body with wheel coverings are considered an open wheel car.

High Speed Autocross Classification List

(SPA) is the Stock Point Assessment assigned to that specific vehicle

1. Class Z (ZS, ZP, ZM)

Acura NSX, 2016 and Later (SPA = 3)
Audi R8 V10, 2010 and later (SPA = 3)
Audi R8, V8 2007 and later
BMW M3 CS 2014 and later(SPA=2)
BMW M4 GTS 2018 and Later (SPA = 3)
BMW M5 2018 and Later (SPA = 2)
BMW M5 CS 2021 and later (SPA-3)
BMW M8 2020 and Later
Cadillac CT5-V Blackwing 2021 and later (SPA-2)
Cadillac CTS-V, 2016 and later
Chevy Corvette C8 2020 and Later (SPA=2)
Chevrolet Corvette GS 2017 and newer (SPA=2)
Chevrolet Corvette Z06, 2015 and 2019 (SPA=3)
Chevrolet Corvette Z06, 2006-2013 (SPA=2)
Chevrolet Corvette ZR1, 2009 -2018 (SPA=3)
Chevy Corvette, 2014 and later (SPA = 2)
Chevy Corvette Z06, 2023 and later (SPA=5)
Chevy Corvette ZR1 2019 and Later (SPA = 5)
Chevy Camaro Z-28, 2014 and later (SPA=2)
Chevy Camaro ZL1 (including 1LE) 2017 and later (SPA=2)
Chevy Camaro ZL1, 2012-2016
Dodge Charger Hellcat, 2015 and later
Dodge Challenger Hellcat, 2015 and later
Dodge Challenger Hellcat Redeye 2018 and Later (SPA = 2)
Dodge Viper ACR, 2008 and later (SPA=3)
Dodge Viper, 2008 and later (SPA = 2)
Ferrari 458 Forza, 2010, (SPA=3)
Ferrari 488, 2015 -2019
Ferrari 599 GTB Fiorano, 2009 (SPA=3)
Ferrari F430, 2006 and later (SPA=2)
Ferrari California, 2010
Ford GT 2017 and Later (SPA = 3)
Ford Shelby GT500, 2012 - 2014
Ford Mustang GT350, 2016 and later
Ford Mustang GT350R, 2016 and later (SPA = 2)
Ford Mustang GT500 2020 and Later (SPA=2)
Lamborghini Huracan 2018 and Later (SPA = 3)
Lamborghini Gallardo, 2006 and later (SPA=2)
Lexus LFA, 2011 (SPA = 2)
McLaren 720S 2018 and Later (SPA = 3)
Mercedes AMG GT Black Series 2021 and later (SPA-5)
Mercedes AMG GT 2018 and later (SPA-3)
Mercedes-Benz E63, AMG 2015 and later
Mercedes-Benz C63 AMG 2015 and later
Mercedes SL65 AMG, 2009 (SPA=2)
Nissan GTR, 2009 and later (SPA=3)
Nissan GTR Nismo 2014 and Later (SPA=4)
Nissan Z Nismo 2023 and later(SPA=2)
Porsche Cayman GT4, 2015 and later
Porsche Cayman GT4 RS, 2022 and Later. (SPA=3)
Porsche 911 GT2 RS 2018 and Later (SPA = 5)
Porsche 911 GT3 2018 and later(SPA-4)
Porsche 911 Turbo S 2013 and newer (SPA=3)
Porsche 911 Turbo 2008 and newer (SPA = 2)
Porsche Panamera Turbo 2010-2015
Porsche Panamera turbo 2016-2020 (SPA-2)
Porsche Panamera turbo S 2021 and later (SPA-3)
Porsche GT3, 2010 -2013
Porsche 911 GT3, 2014 and later (SPA=3)

2. Class Y (YS, YP, YM)

Alfa Romao Giulia 505hp 2017 and later (SPA=3)
Audi RS3 2018 and later (SPA=4)
Audi RS4, 2007 -2010
Audi RS5, 2011 and later
Audi RS6 2021 and Later (SPA=3)
Audi RS7, 2014 and later(SPA = 3)
Audi S6, 2012 and later
Audi S7, 2012 and later
Audi S8 Bi-turbo, 2012 and later (SPA = 3)
Audi S8, V10 2007 and later
Audi TTRS, 2012 and later (SPA = 4)
Audi TTS, 2010-2014
Audi TTS, 2015 and later
Bentley Continental GT Speed, 2009 (SPA = 3)
BMW 1 Series M Coupe, 2012 (SPA = 2)
BMW 650i, 2012 and later
BMW M2 2016 and later
BMW M2 Competition 2018 and Later (SPA = 3)
BMW M3, 2008-2013 (SPA = 2)
BMW M3, 2014 and later (SPA = 3)
BMW M4, 2014 and later (SPA = 3)
BMW M4 CSL 2022 and later (SPA=5)
BMW M5, 2011 and later (SPA = 3)
BMW M6 Gran Coupe 2018 and Later (SPA = 3)
Cadillac ATS-V, 2015 and later (SPA = 3)
Cadillac CT4-V Blackwing 2021 and later (SPA-2)
Cadillac CTS-V, 2009-2015 (SPA=3)
Chevrolet Corvette GS, 2010 - 2013 (SPA = 3)
Chevrolet Corvette Z06, 2001-2004 (SPA = 3)
Chevrolet Corvette, 1997-2004, except Z06
Chevrolet Corvette, 2005-2013, except Z06 (SPA = 3)
Chevy Corvette Collector Edition, 2012 (SPA=3)
Chevy Camaro SS 1LE, 2012-2015 (SPA = 2)
Chevy Camaro SS 1LE, 2016 and later (SPA = 4)
Chevy Camaro, 2016 and later (SPA = 3)
Dodge Challenger SRT8, 2008 and later (SPA=2)
Dodge Charger SRT8, 2009 and later (SPA=2)
Dodge Viper, 450HP or greater (includes'97 and later RT/10, '96 and later GTS and ACR), (SPA = 3)
Dodge Viper, under 450 HP (incl. RT/10 before '97) (SPA = 3)
Ferrari F355, 1997 and later
Ferrari F40, F50 all
Ford "Shelby" Mustang GT500, 2007-2010 (SPA = 3)
Ford GT, 2005-2006 (SPA = 6)
Ford Mustang "Saleen" supercharged 351 (SPA = 3)
Ford Mustang BOSS 302, 2012 and later (SPA = 2)
Ford Mustang Bullitt 2019 and Later (SPA = 4)
Ford Mustang Dark Horse 2014 and later (SPA=4)
Ford Mustang GT, 2015 and later (SPA = 3)
Ford Mustang GT Perf Pack Lev 2 2019 and Later (SPA = 4)
Ford Mustang Mach 1 2021 and later (SPA-3)
Ford Shelby GT500, 2011 (SPA = 4)
Infinity Q60 400hp 2017 and newer
Jaguar F-Type V8, 2015 and later (SPA = 4)
Lexus IS500F 2021 and later (SPA-3)
Lexus ISF, 2008 and later (SPA = 3)
Lexus RC-F, 2015 and later (SPA = 3)
Lotus Elise, 1998 (SPA = 3)
Lotus Elise, 2005 and later w/sport package (SPA =3)
Lotus Evora S, 2012 & later (SPA = 3)
Lotus Exige S, (SPA = 4)
Lotus Exige S240, 2008 (SPA = 6)
Lotus Exige S260 Sport (SPA = 6)
Lotus Exige, (SPA = 3)
Mercedes Benz CLA45 AMG, 2014 and later

Mercedes-Benz C63 AMG, 2008-2014
Mercedes E63 AMG ,all (SPA = 4)
Mercedes-Benz E63, AMG 2010-2014 (SPA=2)
Nissan Z, 2023 and later
Porsche 911 Carrera 4S, 2009 (SPA = 6)
Porsche 911 Carrera S, 2005 and later (SPA = 3)
Porsche 911 Turbo, 1996-2005 (SPA = 3)
Porsche 911 Turbo, 2006-2007 (SPA = 6)
Porsche 930, 959, all (SPA = 3)
Porsche Cayman GTS, 2014 and later (SPA = 4)
Porsche Cayman S, 2011 and later (SPA = 3)
Toyota Supra 6 cyl 2019 and Later (SPA=3)

3. Class X (XS, XP, XM)

Alfa Romeo 4C, 2015 and later (SPA = 2)
Acura Integra Type S 2024 and later (SPA=2)
Acura NSX, 1990-1993
Acura NSX, 1994-1996 (SPA = 2)
Acura NSX, 1997 -2005 (SPA=2)
Acura TLX Type S 2021 and Later
Audi A8 4.0L BI-Turbo 2012 and Later
Audi A8 Quattro,2010
Audi S3 2013 and Later
Audi S4 Quattro (V8), 2004-2009
Audi S4, 2010 and later
Audi S5, 2008 and later
Audi TT 3.2 Quattro, 2006 and later
Audi S8, V8 1996-2002
Birkin, 2001-2002
BMW 135i, 2008 and later
BMW 335i Sedan, 2007 and later
BMW 340i, 2015 and later
BMW 435, 2014 and later
BMW 535i, 2004 and later
BMW 550i GT 2010
BMW 850C, all
BMW 850 CSi, all
BMW M235i, 2013 and later
BMW M240 2021 and later
BMW M Coupe, 315HP, 2001-2002
BMW M Roadster, 2006 and later
BMW M5, 2000-2005
BMW M5, 2006-2010 (SPA = 2)
BMW M3, 2001-2007
BMW M340I 2020 and Later (SPA=2)
BMW M440I 2020 and Later (SPA=2)
BMW M6, 2006 and later (SPA = 2)
BMW Z4 3.0i, 2003 and later
BMW Z4 M Coupe, 2006 and later
Chevrolet Camaro V6, 2016 and newer
Chevrolet Camaro Z28 SS, 1996 and later
Chevy Camaro 2.0T 1LE 2017 and Later
Chevy Camaro SS, 2010-2015 (SPA = 2)
Chevy Camaro V6 1LE 2017 and Later (SPA = 2)
Chevrolet Corvette GS, 1996 (SPA = 2)
Chevrolet Corvette LT4, 1996 (SPA = 1, except GS)
Chevrolet Corvette, 1992-1996, except ZR-1 LT4, GS
Chevrolet Corvette ZR1, 1990-1995, (SPA = 2)
Chevy SS 2014 -2016
Cadillac CT4-V 2021 and Later
Cadillac CT5-V 2021 and Later
Cadillac CTS-V, 2004 - 2007 (SPA = 2)
Cadillac CTS-V-Sport, 2014 and later (SPA = 2)
Cadillac STS-V, 2006 and later (SPA = 2)

Chrysler 300C SRT-8, 2005 and later
Dodge Challenger RT 2008 and later
Ferrari 12-cyl, all (SPA = 2)
Ferrari 348, all
Ferrari F355, pre-1996 (SPA = 2)
Ford Focus RS, 2016 and later (SPA = 2)
Ford Mustang 2.3T, 2015 and later
Ford Mustang GT, 2011-2014 (SPA = 2)
Ford Mustang Cobra 351, 1995 (SPA = 2)
Ford Mustang Cobra R-model, 2000
Ford Mustang Cobra R, 1993
Ford Mustang Cobra R, 1995 (SPA = 2)
Ford Mustang Cobra, 2003 (SPA = 2)
Ford Mustang Cobra, 1999-2002, except R- model
Ford Mustang GT (V8), 2005-2010
Ford Mustang Mach 1, 2003 and 2004
Ford Taurus SHO, 2010 and later
Genesis G70 V6 Turbo 2018 and Later
Genesis G70 V6 2021 and Later
Honda Civic Type R 2017 and 2021
Honda Civic Type R 2021 Limited Edition (SPA=2)
Honda Civic Type R 2022 and Later (SPA=3)
Hyundai Genesis 4.6 V8, 2009
Hyundai Genesis Coupe, V6 2012 and later
Infiniti G35 Sport, 2007 and later
Infiniti G37, 2008 and later
Infinity Q50 V6 2013 and Later
Infinity Q60 V6 2017 and Later
Jaguar F-Type, 2015 and later
Jaguar XE 2016 and later
Jaguar XF SC, 2009
Kia Stinger V6 2017 and later
Lexus LS 600h L 2008 (hyb.)
Lotus Elise, 2005 & later w/o sport package (SPA = 2)
Lotus Espirit V8, 1998 and later (SPA = 2)
Lotus Espirit Turbo, all (SPA = 2)
Lotus Evora, 2010 (SPA = 2)
Mazda RX-7 R1 Turbo, 1993 and later (SPA = 2)
Mazda RX-7 Turbo, 1993 and later, except R1
Mercedes Benz A35 AMG 4matic 2020 and Later
Mercedes C55AMG, 2005
Mercedes Benz C43, 2016-2022
Mercedes Benz CLA35 AMG 2020 and Later
Mercedes Benz E53, 2016-2022
Mercedes SLK350, 2005
Mercedes SLK350 AMG, 2005 and later
Mercedes SLK350, 2005 and later
Mercedes E550 Coupe, 2010
Maserati 3200 GT, 2000 and later
Mini Cooper JCW GP 2020 and later (SPA-2)
Mitsubishi Lancer Evo IX MR, 2006-2007
Mitsubishi Lancer Evo MR, 2004-2007
Mitsubishi Lancer Evo VIII or RS, 2003 and later
Mitsubishi Evo GSR, 2008 and later
Mitsubishi Evo MR, 2008 and later (SPA = 1)
Nissan 370Z, 2009 and later
Nissan 370Z Nismo 2009 and later (SPA=2)
Pontiac Firebird 5.7 w/ 1LE options (WS6 required), 1997
Pontiac Firebird 5.7, 1998 & later (ram air and/or WS6)
Pontiac Firebird Firehawk 5.7, 1993-1994
Pontiac Firebird Firehawk, 1995-1997
Pontiac Firebird Formula Firehawk, pre-1993, (SPA = 2)
Pontiac Firebird V8 with 1LE options, (WS-6 req'd), 1996-1997
Pontiac G8 GXP, 2009
Pontiac G8 GT (automatic), 2008
Pontiac GTO, 2004 and later

Pontiac Solstice GXP, 2007 and later
Pontiac Trans Am Firehawk, 1998 and later (SPA = 2)
Porsche 911 Carrera 4, 1999
Porsche 911 Carrera, 2005 and later (SPA = 2)
Porsche 911 Carrera America, 1988-1997, (SPA = 2)
Porsche 911 Carrera, 1998 and later
Porsche 911 Speedster, 1994 and later (SPA = 2)
Porsche 911 Turbo, 260-285HP, 1978-1990, (SPA = 2)
Porsche 911 Turbo, 290-355HP, 1991-1995, (SPA = 2)
Porsche 911 Turbo, under 255HP, pr-1978
Porsche 928 GTS, all
Porsche Boxster S
Porsche Cayman, 2007 and later
Saturn Sky Redline, 2007 and later
Shelby Cobra 427 or FIA 289 (SPA = 2)
Subaru Legacy 2.5 GT “Spec B”, 2006 and later
Subaru WRX RA 2019 and later (SPA=2)
Subaru WRX S209 2019 and later (SPA=2)
Subaru WRX STi, 2004 and later (SPA=1)
Toyota GR Corolla, 2023 and later (SPA=2)
Toyota Supra 4 cyl 2020 and Later
Toyota Supra Turbo w/o targa top, 1993 and later, (SPA = 2)
Toyota Supra Turbo w/targa top, 1993 and later
VW Golf R 2022 and Later

4. Class A (AS, AP, AM)

Acura Integra 2023 and Later
Acura TL SH-AWD, 2009 and later (SPA = 2)
Acura TL Type S, 2007 and later
Audi A3, 2015 and later
Audi A4 3.2 Quattro, 2009 and later
Audi A6 3.0 T Quattro, 2010 and later
Audi A7, 2012 & later
Audi A8 3.0T 2011 and Later
Audi S4, 1997-2001
Audi TT, 2016 and later
BMW 128i, 2008
BMW 228i, 2014 and later
BMW 330i, 2006 and later
BMW 335d, 2009
BMW 540i w/6-speed, 1995 and later
BMW 545i, 2004 and later (SPA = 2)
BMW 640i, 2012 and later
BMW 645ci, 2004 and later (SPA = 2)
BMW 750i, 750Li, all
BMW 840i, 850i, all
BMW M Coupe, 240HP, year 1999-2000
BMW M Roadster 6 cyl, 1998-2002
BMW M3, 1995-2000
BMW M5, pre-1999
BMW M6, pre-1999
BMW Z3, 3.0L, 2001-02
Cadillac ATS 2.0T,3.6,2012 and later
Chevrolet Camaro 2.0T, 2016 and later
Chevrolet Camaro 5.7 with 1LE
Chevrolet Camaro LT V6, 2010
Chevrolet Camaro V8 with 1LE options, 1989-1992
Chevrolet Camaro V8 with 1LE options, 1993-1997 (SPA = 2)
Chevrolet Camaro V8, 1993-1997, exc. Z28 SS or 1LE options
Chevrolet Camaro V8, 1998 and later except Z28 SS (SPA = 2)
Chevrolet Cobalt SS, 2008 and later (SPA = 2)
Chevrolet Corvette with LT1 option, 1970-1972
Chevrolet Corvette, 1985-1991, except ZR-1
Chevrolet Corvette, 396 cid or larger, all

Chrysler 300C, 5.7 engine, 2004 and later, including AWD
Dodge Challenger 376HP, Automatic
Dodge Charger R/T with 5.7L, 2008 and later, including AWD
Dodge Magnum R/T, with 5.7L, 2005 and later, including AWD
Dodge SRT4 ACR
Dodge SRT4, 2003-2005
Dodge Stealth Twin Turbo, 1992-1993
Dodge Stealth Twin Turbo, 1994 and later (SPA = 2)
Ferrari, all except Class X, Y, and B lists
Ford Focus ST, 2012 and later
Ford Mustang “Shelby Cobra” 260, 289, all except FIA or 427
Ford Mustang Bullit, 2001 (SPA = 2)
Ford Mustang Cobra, 1993
Ford Mustang Cobra, 1994-1995, except 351
Ford Mustang Cobra, 1996-1998 (SPA = 2)
Ford Mustang GT, 1999-2004
Ford Mustang Saleen/SAAC, all except supercharged or 351
Ford Mustang V-6, 2011 and later
Genesis G70 2.0T 2020 and Later
GMC Syclone, Typhoon, all
Griffith, all
Honda Accord V6, 2008 and later
Honda Civic 2018 and Later
Honda S2000 CR (SPA = 3)
Honda S2000, 2000 and later except CR
Hyundai Elantra N, 2022 and later
Hyundai Genesis Coupe 4T, 2012 and later
Hyundai Genesis Coupe V6, 2010-2011
Hyundai Kona N, 2022 and later
Hyundai Veloster N, 2018 and Later (SPA = 2)
Infiniti G35 Coupe, 2003-2007, except 2007 Sport
Infiniti M37, 2010 and later
Jaguar XF, 2009
Jaguar XK Coupe, 2007 and later
Kia K5 GT 2019 and Later
Lexus GS350 AWD, 2007 and later (SPA = 2)
Lexus IS 350, 2006 and later
Lexus LS460 Spt, 2010
Lexus RC350, 2015 and later
Mazda 3 2.5 turbo 2020 and Later
Mazda 6s GT, 2009 and later
Mazda Mazdaspeed 3, 2007 and later
Mazda Mazdaspeed 6, 2005 and later
Mazda RX8 R3, 2009
Mazda RX-8, 238 HP (manual), 2004 and later
Mercedes Benz CLA250
Mercedes Benz CLK 500, 2004 and later (SPA = 2)
Mercedes Benz CLK 55 AMG 2000-2002
Mercedes Benz CLS55 AMG, 2004-2007
Mercedes-Benz C350 Sport, 2008 and later
Mercedes-Benz C36 AMG, all
Mercedes-Benz C43 AMG, all
Mercedes-Benz E350, 2009
Mercedes-Benz E55 AMG, all
Mini John Cooper Works Pkg., 2006 and later
Mitsubishi 3000GT VR4, 1992-1993
Mitsubishi 3000GT VR4, 1994 and later (SPA = 2)
Mitsubishi Eclipse GT, 2006 and later
Mitsubishi Galant Ralliart, 2007 and later
Nissan 300 ZX Turbo, 1990 and later
Nissan 350Z, 287HP, 2003 and later
Nissan 350Z, 35th Anniversary, 2005 (SPA = 2)
Nissan 350Z, Track model, 2005 (SPA = 2)
Nissan Altima 3.5 SE 2008 and later
Nissan Altima SE-R, 2005
Nissan Maxima, 2009 and later

Pantera, all
Pontiac Firebird 5.7 with 1LE option, 1993-1994 (SPA = 2)
Pontiac Firebird 5.7, 1993-1997, except Firehawk or 1LE options or 95-97 WS6
Pontiac Firebird 5.7, 1998 and later (non ram air, non-WS6) (SPA = 3)
Pontiac Firebird or TransAM V8 with 1LE options, 1989-1992
Pontiac Firebird V8 with 1LE options, 1993-1995 (SPA = 2)
Pontiac G6 GXP, 2009
Pontiac Grand Prix GXP, 2006
Pontiac TransAm V6 Turbo, 1989
Porsche 911, 182HP or more, except X and Y lists
Porsche 928, all including S4, GT, Except GTS
Porsche 944 Turbo, 1988 and later
Porsche 968, 1997 and later
Porsche Boxster, all exc. S
Subaru BRZ, 2022 and later
Subaru WRX, 2009 and 2021
Subaru WRX, 2022 and Later (SPA=2)
Toyota Camry TRD 2019 and later
Toyota GR86 2021 and later
Toyota Supra, 1993.5 - 1998, all except Turbo
TVR V8, all
Volvo S60, 2010 and later
Volvo S60R, 2004 and later
VW CC 3.6 4Motion
VW Golf R, 2012 and later
VW GTI, 2015 and later
VW R32, 2004 and later

5. Class B (BS, BP, BM)

This class includes all 1964-1972 GM or Mopar intermediate models with 396 cid or larger, except 2bbl, unless listed elsewhere.

Acura 3.2CL Type S, and 3.2 TL Type S, 2001-2006
Acura Integra Type-R, 1997 and later
Acura RDX, 2007 and later
Acura RSX Type S, 2002 and later
Acura TL, 2004 and later
Alfa Romeo LS, Quadrifoglio, 1994 and later
AMC Javelin V8 or AMX V8 w/4bbl 343 or larger, all
ASC McLaren Capri, all
ASC McLaren Mustang, all
Audi A3 2.0T, 2006
Audi A3 3.2 Quattro S-Line, 2006 and later
Audi A4 2.0T Quattro, 2006 and later
Audi A6 2.7T/2.7T Quattro, all
Audi A6 V8, all
Audi A8 Quattro V6, 1997 – 2009
Audi S4, S6, 1992-1995.5
Audi TT 2.0T, 2006-2014
Audi TT Roadster 3.2 DSG, 2004 and later
Audi TT, 2001-2005, 225hp
Audi V8, 1992-1996
BMW 325i and iX, 2006 and later
BMW 328, all
BMW 330i w/Performance Package, 2003 and later
BMW 330i, 2001 and later, except A list
BMW 428 2014 and later
BMW 540i (except 6-speed), 635Si, 740i, all except M-models
BMW M3, pre-1992
BMW Z3, 6 cyl, all except M
BMW Z4, 2.5i, 2003 and later
Buick Grand National, all including GNX except non-intercooled
Buick LaCrosse, 2010
Buick Regal GS 2008-2017
Buick Verano, 2012 & later

Cadillac Allante, 1993 and later
Cadillac CTS (255 HP automatic), 2004 and later
Cadillac Seville STS, 1998 and later
Cadillac STS V6, 2005 and later
Cadillac XLR, 2004 (SPA = 2)
Chevrolet Camaro RS or Z28 5.0, 1989-1992, all except with 1LE options
Chevrolet Camaro V8 w/ 4bbl 302 or larger, including Z28, 1967-1981
Chevrolet Camaro Z28 or IROC, 1982-1988, all except Class C list
Chevrolet Cobalt SS, 205HP, 2005
Chevrolet Corvette, all except Class Y, X, A, and C lists (1984 Corvette within Modified category shall be bumped to AM)
Chevrolet HHR SS, 2008 and later
Chevrolet Impala V6, 2013 and later
Chevrolet Malibu LTZ, 2008
Chrysler Crossfire, 2004 (SPA = 2)
Datsun 280ZX Turbo, all
Dodge Caliber SRT4, 2008
Dodge Challenger V8 w/4bbl 340 cid or larger, 1970-1974
Dodge Daytona IROC RT, all
Dodge Stealth, all except Class A and C lists
Eagle Talon Turbo, all including AWD
Fiat 124 Spyder 2016 and later
Ford Fairlane or Torino V8 w/427 cid or larger, 1963-1971
Ford Fiesta ST, 2013 and later
Ford Fusion V6, 2005-2013
Ford Lightning (Truck), 1999 and later
Ford Mustang (V6) (manual), 2005-2010
Ford Mustang GT, 1985-1998
Ford Mustang LX 5.0, 1985 and later
Ford Mustang V8 w/289HP, 351HO, or 390 4bbl and larger, 1964-1973
Ford Mustang, all Boss models, 1969-1972
Ford Taurus LTD, 2010
Ford Thunderbird, 2002 and later
Honda Accord EX-L, 2008 and later
Honda Accord V6, 2003-2007
Hyundai Genesis Cp 4T, 2010
Hyundai Sonata SE 2.0T, 2011
Hyundai Veloster, turbo, 2012 and later
Infiniti G35 Sedan, 2003 and later
Infiniti M45 2003
Infiniti Q45, 2002 and later
Jaguar XJR-S, all
Jaguar XJS 12 cyl, 1994 and later
Jaguar XK8, 1997 and later
Kia Optima Turbo, 2011 & later
Kia Stinger (4-cyl) 2017 and later
Lexus GS400, all
Lexus LS430, 2001 and later
Lexus SC430, 2003 and later
Lincoln LS V8, 2003 and later
Lotus Elan, 1990 and later including SE
Lotus Europa twin cam, all
Maserati Karif Turbo, Biturbo E, all
Mazda MX-5 Miata Club, 2015 and later (SPA = 2)
Mazda MX-5, 2006 and later
Mazda MX-5 Cup (SPA-4)
Mazda RX-7 Turbo, pre-1993
Mazda RX-8, 197HP (automatic), 2004 and later
Mazdaspeed Miata (w/factory turbo), 2004 and later
Mercedes-Benz 600SEL, 600SL, S500, 500E, all
Mercedes-Benz C1500, 2000 and later
Mercedes-Benz CLA250, 2014 and later
Mercedes Benz CLS 550, 2007 and later
Mercedes Benz E300, 2016-2022
Mercedes-Benz E430, all
Mercedes-Benz E500, 2003
Mercedes-Benz S550, 2007 and later

Mercedes-Benz SL500, 2003
Mercury Cougar V8 w/427 cid or larger, 1967-1973
Mitsubishi 3000GT SL, all
Mitsubishi Eclipse Turbo, all including AWD
Nissan 300ZX Turbo, pre-1990
Nissan 300ZX, 1990 and later, except Turbo
Nissan Altima 3.5, 5-speed, 2001-2007
Nissan Maxima, 2002-2008
Plymouth Barracuda V8 w/4bbl 340 cid or larger, 1967-1974
Plymouth Laser Turbo, 1989 and later
Plymouth Prowler, 1997 and later
Pontiac Firebird or TransAm V8 w/4bbl 305 cid or larger, 1967-1981
Pontiac Firebird or TransAm, 1982-1988 all except Class X, A, and C lists
Pontiac Firebird or TransAm, 1989-1992 except Class Y, X, A, and C lists
Pontiac Grand Prix GTP, 1997 and later
Pontiac Grand Prix GXP V6, 2006 and later
Pontiac Grand Prix Turbo, 1989-1992
Pontiac GXP, 2006 (auto.) and later
Porsche 911, all incl. SC (180 HP) not otherwise classified
Porsche 944 16 valve, all except Class A list
Porsche 944 Turbo, 1986-1987
Renault R5, mid-engine, all
Saab 9.5 Aero XWD, 2011
Saab 9-3 Viggen, 2000 and later
Saab 9-5 Aero, 2000 and later
Saturn Aura XR, 2007 and later
Saturn Ion Redline, 2004 and later
Scion FR-S, 2012 and later
Subaru BRZ, 2012-2021
Subaru Forester XT, 2004 and later (SPA = 2)
Subaru Legacy 2.5GT, 2005 and later except Spec. B
Subaru Legacy 3.6R Ltd, 2010
Subaru WRX, 2000-2008
Toyota Avalon, 2005 and later
Toyota Camry SE V6, 2007 and later
Toyota MR-2 Turbo, all
Toyota Supra Turbo, pre-1993
Volvo 850 T-5R, 850R or V70R, all
Volvo C30, 2008
Volvo C70 coupe, 1998 and later
Volvo S40 T5, 2005 and later
Volvo S80 (twin) Turbo, all
Volvo V40 T5 AWD, 2006 and later
VW Beetle Turbo, 2012 and later
VW CC 2.0T, 2011 and later
VW GTI 2.0T, 2006 and later
VW Passat 3.6, 2006 and later

6. Class C (CS, CP, CM)

This class includes all vehicles with Carbureted V8's with less than 396cid, unless listed elsewhere.

Acura 3.0C or 3.5
Acura Integra GS-R, all except Type-R
Acura Legend, all
Acura RL SH-AWD, 2005-2012
Acura RSX, all except Type S
Acura TL DOHC V6, all except Type S
Acura TSX, 2004 and later
Alfa Romeo Milano, GT V6, 164S, 164LS, pre-1994
AMC American, Concord, Spirit, Gremlin or Hornet, all V8 except Class D list
AMC Javelin V8 or AMX V8, all except Class B and D lists
Audi 200 Turbo, all
Audi A3 1.8T, 2015 and later

Audi A4 1.8T AWD, 1997-2000
Audi A4 2.8 20V V6, 1998-
Audi A6, not otherwise classified
Audi TT, 180hp w/5-speed, all
BMW 320, 2015 and later
BMW 323, all except M models
BMW 323i, 1998-2000
BMW 325, all including iX, except M-models, except Class B list
BMW 325i, 2001 and later, except Class B list
BMW 525 or 528 24 valves, all
BMW 525i (E60 chassis), 2004 and later
BMW 530i (e39) (SPA = 2)
BMW 530i (E60 chassis), 2004 and later (SPA = 2)
BMW 535i, 1982-1993, except M-Models
BMW 635, all excluding M-models and Si
BMW 735i, all
BMW Z3 4 cyl, all
Buick Grand National, w/non-intercooled engines, all
Buick Regal CXL Turbo, 2011
Buick Regal V6 Supercharged, 1997 and later
Cadillac CTS, 220HP, 2002
Cadillac Eldorado, 1993 and later
Cadillac Seville SLS, 1998 and later
Cadillac Seville STS, 1993-1997
Chevrolet Beretta GTZ or Z26, all
Chevrolet C1500 454SS (truck), all
Chevrolet Camaro V8, 1967-1981 exc, Class B and D lists
Chevrolet Camaro w/Series II V6, 1995-2002
Chevrolet Camaro Z28 w/LG4 V8, 1982-1988 (8th VIN digit=H)
Chevrolet Corvette, 1957-1962
Chevrolet Impala SS, 1994-96
Chevrolet Lumina Z34 or Monte Carlo Z34, all
Chevrolet Monza V8, all
Chrysler 300 (3.5L V6), 2005 and later
Chrysler 300, 2005
Chrysler 300M, all
Chrysler Conquest Turbo TSI-R, all
Chrysler LHS, 1999 and later
Datsun 240Z, 260Z, 280Z, all
Dodge Charger Turbo II (175 HP, intercooled), all exc. IROC RT
Dodge Intrepid R/T, 2000 and later
Dodge Lancer Turbo, 1989 and later
Dodge Magnum (3.5L V6), 2005 and later
Dodge Omni GLHS, all
Dodge Shadow CSX, all
Dodge Shelby Dakota or Dakota R/T (truck), all
Dodge Shelby Daytona 2.2 Turbo II, all
Dodge Spirit R/T, all
Dodge Stealth SOHC V6, all
Fiat 500 Abarth, 2012 and later
Ford Contour SVT, all
Ford Focus SVT, 2002-2004
Ford Lightning (truck), 1993-1995
Ford Mustang GT or LX 5.0, 1982-1984
Ford Mustang SVO, all
Ford Mustang V6 (auto), 2005 (SPA = 2)
Ford Mustang V6, 1999-2004
Ford Mustang V8, 1964-1973 except Class B and D lists
Ford Probe GT, all
Ford Taurus SHO, 1989-1999
Ford Thunderbird Super Coupe, 1989 and later
Ford Thunderbird Turbo, 1987-1988
Honda Accord EX-L 4 cyl, 2007 and later
Honda Accord V6, automatic, 2003-2007
Honda Accord, V6, 1998-2002
Honda Civic Coupe SI 2016 and later

Honda Civic del Sol VTEC, all
Honda Civic Si DOHC VTEC, 1999-2005
Honda Civic Si, 2006 and later
Honda Prelude DOHC, 1992 and later, except VTEC
Honda Prelude VTEC, Auto, 1993 and later
Hyundai Sonata V6, 2006 and later
Hyundai Tiburon SE, 2007 and later
Infiniti I35, 2002-2003
Isuzu Impulse RS, 1991 and later
Jaguar S-type V6 or V8, 2000 and later
Jaguar XKE, SJS 12 cyl, all except Class B list
Jaguar X-Type V6 3.0, 2001-2009
Kia Forte Koup SX, 2010
Lexus IS 250 AWD, 2006 and later
Lexus IS 300, 2001 and later
Lexus LS400, 1995 and later
Lexus SC300 or SC400, all
Lincoln Continental, 1995 and later
Lincoln LS V6 or V8, 2000 and later, except 2003 V8
Lincoln Mark VIII, all
Lotus Europa, all except twin cam
Maserati V6, all except Turbo
Mazda 3, 2009
Mazda 3s GT, 2010
Mazda 6, V6 w/5-speed, 2003
Mazda MX-6 GT, pre-1993
Mazda MX-6 V6, 1993 and later
Mazda RX-7, 1984-1985 w/13B engines
Mazda RX-7, 1986-1992, all except Turbo
MazdaSpeed Protégé, 2003
Mercedes-Benz 400E, E420, 500SEC, S430, C230 Supercharged, CLK320, all
Mercedes-Benz C230, Sports Coupe
Mercedes-Benz C320, 2002
Mercedes-Benz E320, 2003
Mercedes-Benz SLK, all
Mercury Capri 5.0, 1982-1984
Mercury Cougar V6, 1999 and later
Mercury Cougar V8, all except Class B and Class D lists
Mercury Marauder, 2003
MINI Cooper S, 2002 and later, except JCW Pkg.
Mitsubishi 3000GT SOHC V6, all
Mitsubishi Eclipse V6, all
Mitsubishi Gallant VR-4 Turbo, all
Mitsubishi Starion Turbo 2.6, all
Nissan 300ZX, pre-1990, all except Turbo
Nissan Altima (hybrid), 2009
Nissan Altima, 3.5SE, auto, 2002 and later
Nissan Maxima SE w/5-speed, 1995-2001
Nissan Maxima, 2002-2003, automatic
Nissan Sentra SE-R Spec V, 2002 and later (SPA = 2)
Nissan Sentra SE-R, except Spec V, 2002 and later
Oldsmobile 88 LSS Supercharged V6, 1995 and later
Oldsmobile Cutlass Supreme DOHC V6, 1991 and later
Oldsmobile Intrigue w/DOHC V6, all
Plymouth Barracuda V8, all except Class B and D lists
Plymouth Sundance Turbo II (175 HP, intercooled), all
Pontiac Bonneville SE or SSE supercharged, 1995 and later
Pontiac Firebird or TransAm V8, 1967-1981, except Class B and D lists
Pontiac Firebird or TransAm w/LG4 V8, 1982-1988 (eighth VIN digit=H)
Pontiac Firebird w/Series II V6, 1995 and later
Pontiac G6, 240HP, 2006
Pontiac Grand Prix DOHC V6, 1991-1997
Pontiac Grand Prix GTP, all
Pontiac Solstice, 2006 and later, except Turbo
Pontiac TransAm 301cid Turbo, 1979-1981
Porsche 911 models w/ 130 to 165 HP

Porsche 924S or 924 Turbo, all
Porsche 944, all except Class A and B lists
Saab 900 and 9000 Turbo, all
Saab 9000 V6, all
Saab 9-3 2.0T Arc, 2003
Saab 9-3 Turbo, all except Viggen
Saab 9-5 4-cyl Turbo, all except AeroSaab 900 V6, 1994 and later
Saab 9-5 V6 Turbo, all
Saturn Sky, 2006 and later, except Turbo
Scion tc, 2004 and later except w/TRD Supercharger
Scion Xb, 2007 and later
Subaru Impreza 2.5i, 2008
Subaru Impreza 2.5RS, 1997 and later
Subaru Legacy Touring Wagon GT, 1995-1999
Subaru SVX, all
Sunbeam Tiger V8, all
Toyota Camry Hybrid, 2007 and later
Toyota Camry V6 w/ 5 speed, 1997-2006
Toyota Celica GT-S, 2000 and later, including TRD
Toyota Celica Turbo, all
Toyota MR-2 Supercharged
Toyota MR-2, 2000
Toyota Solara V6, all
Toyota Supra, all except Class X, A, B, and D lists
Toyota Tacoma X-Runner, 2005
Toyota XRS Matrix, 2002
Volvo 850 Turbo, all except T-5R and 850R
Volvo GLT Turbo, all
Volvo S70 Turbo, all
VW Corrado V6, all incl. supercharged
VW GTI 20 valve, 180HP, (except 337 or 20th anniv. Models), 2002 and later
VW GTI 20th anniv. edition, 2003 (SPA = 2)
VW GTI 337 model, 2002 (SPA = 2)
VW GTI VR6, 1999 and later, except R32
VW Jetta V6 or Golf V6, all
VW New Beetle Turbo 1.8, all

7. Class D (DS, DP, DM)

This class includes all two wheel drive 4 cylinder turbocharged trucks, unless listed elsewhere. Vehicles constructed with 2 bbl V8 and later modified with 4bbl installations and other modifications which move the vehicle to a Modified category shall be classified as equivalent 4bbl equipped vehicles within Class C, plus other modifications excluding the factory equivalent 4bbl installation.

Acura 2.2CL, 1997 and later
Acura 3.2TL, 1997 and later
Acura Integra, 1990 and later except GS-R and Type-R
Acura Vigor or TL 5 cyl., pre-1997
Alfa Romeo Alfetta, all
AMC American, Concord, w/2bbl V8, all (See Note above)
AMC Gremlin, Hornet, w/2bbl V8, all (See Class D Note)
AMC Javelin, Spirit w/2bbl V8, all (See Class D Note)
Audi 100, 1992 and later
Audi 4000 Turbo, all including Coupe
Audi 5000 Turbo, all
Audi 90 20 valve, pre-1993
Audi 90 V6, 1993 and later, including AWD and Coupe
Audi A4 1.8T FWD, 1997-2000
Audi A4 V6, 1993 and later, including AWD and Coupe
Audi A6, 1992 and later, except B and C lists
Audi A8, all except Quattro
Audi V8, pre-1992
BMW 2002 tii, all
BMW 318 16 valve, all
BMW 325E, 1984-1987

BMW 525, all except 24 valve
BMW 528, pre-1996
BMW Z3, all except DOHC
Buick Gran Sport, 1997 and later
Buick Reatta, 1998 and later including supercharged
Buick Regal 3.8, all except supercharged
Buick Riviera Supercharged, 1995 and later
Buick Riviera, 1988-1994
Buick Skyhawk Turbo, all
Cadillac Allante, pre-1992
Cadillac Catera, 1997 and later
Cadillac Seville STS, 1988-1992
Chevrolet Beretta GT or GTU, all except GTZ and Z-26
Chevrolet Camaro 2bbl V8, 1967-1981 (See Class D Note)
Chevrolet Camaro V6, all except 1993 and later Series II
Chevrolet Caprice w/350 cid, 1992 & later except Impala SS
Chevrolet Cavalier Quad-4, 1995 and later
Chevrolet Cavalier Z24, all
Chevrolet Cobalt 2.2L, 145HP, 2005
Chevrolet Corvair Turbo, all
Chevrolet Impala 3.8V6, 2000 and later
Chevrolet Impala 4-Cyl, 2013 and later
Chevrolet Lumina or Monte Carlo, w/DOHC, all except Z34
Chevrolet Malibu V6, 2004 and later
Chevrolet Monte Carlo 3.8 V6, 2000 and later
Chevrolet Monte Carlo, 1983-88
Chevrolet S-10 Xtreme, 1999 and later
Chevrolet Volt 2011
Chrysler Laser Turbo, all Chrysler Lebaron Turbo, all
Chrysler PT Cruiser, all
Chrysler Sebring with DOHC V6, 2001 and later
Chrysler/Dodge Neon ACR SOCH, 2000 and later
Chrysler/Dodge Neon RT SOHC, 2000 and later
Datsun 2000 w/Mikuni-Solex carbs, all
Dodge Avenger V6, all
Dodge Challenger 340 cid or smaller V8 w/2bbl, 1970-1974 (See Class D Note)
Dodge Charger Turbo, all except Class C list
Dodge Colt Turbo, all
Dodge Daytona Turbo, all except Class B and C lists
Dodge Daytona V6, all
Dodge Intrepid 24 valve w/Autostick, 1996 and later, except R/T
Dodge Lancer Turbo, 1986-1988
Dodge Neon DOHC, all
Dodge Neon SOHC, 2000 and later
Dodge Omni GLH Turbo, all except GLHS
Dodge Shadow Turbo, all except CSX
Dodge Stratus with DOHC V6, 2001 and later
Eagle Talon 2.0 16 valve, all except Turbo
Eagle Vision Tsi w/Autostick, 1996 and later
Ford Contour V6, all except SVT
Ford Crown Victoria, Police Package, 1997-2011, (SPA = 2)
Ford Escort GT, 1991-1996
Ford Escort or EXP w/Turbo, all
Ford Escort ZX2, 1997 and later
Ford Focus all, except SVT, 2000-2005
Ford Fusion (hybrid), 2009
Ford Fusion 4 cyl
Ford LTD or LX, 1984-1986
Ford Mustang 2.3 Turbo, all except SVO
Ford Mustang 2bbl V8, 1964-1981 (See Class D Note)
Ford Mustang V6, 1994-1998
Ford Taurus 3.8 w/police package, all
Ford Thunderbird Turbo, 1983-1986
Ford Thunderbird V8, 1983 and later Geo Storm GSi, all
GMC Sonoma GT (truck) w/V6, all
Honda Accord, 1990-2003 4 cyl

Honda Accord, V6, 1995-1997
Honda Civic CRX Si, all
Honda Civic EX VTEC SOHC, 1998 and later
Honda Civic Si or Del Sol Si, all except VTEC
Honda Prelude Si, pre-1992
Hyundai Scoupe Turbo, all
Hyundai Veloster, non-turbo, 2011 and later
Infinite Q45, pre-2002
Infiniti M30 and I30, all
Isuzu Impulse SX and Turbo, all except 1991 and later RS
Jaguar XJS 6 cyl all
Jensen Healey, all
Kia Forte 2010
Kia Optima EX (auto), 2011
Lancia Scorpion, Beta HPE, Zagato, all
Lexus ES300 or GS300, all
Lexus HS 250H Hybrid
Lexus LS400, pre-1995
Lotus Cortina, all
Lotus Elite, all
Mazda 2 Touring, 2011
Mazda 3, 2004 and later
Mazda 323 GTX, all
Mazda 6, 4cyl, 2003
Mazda 6, V6 w/automatic, 2003
Mazda 626 Turbo or V6, all
Mazda 6i Touring 4cyl 2009
Mazda 929S, all
Mazda Miata, 1990-2005, all except Mazdaspeed model
Mazda Millenia supercharged, all
Mazda MX-3 V6, all
Mazda RX-7, 1979-1985 w/12A engine
Mercedes-Benz C280, 300, E320, or 450 S-class, all
Mercedes-Benz CLK320, 1997 and later
Mercury Capri 2.3 Turbo, all
Mercury Capri Turbo, 1991 and later
Mercury Capri V6, 1972-1978
Mercury Cougar 2bbl V8, 1967-1973 (See Class D Note)
Mercury Cougar V8, 1991 and later
Mercury Cougar XR7 Turbo, 1987-1988
Mercury Mystique V6, all
Mercury Scorpio, all
Mercury XR4Ti, all
MINI Cooper, 2002 and later (except S model)
Mitsubishi Cordia Turbo, all
Mitsubishi Eclipse 2.0 16 valve, 1989-1999, except Turbo
Mitsubishi Eclipse 4 cyl, 2000 and later
Mitsubishi Galant GS, 1994 and later
Mitsubishi Galant Turbo, all except VR4
Mitsubishi Galant V6, all
Mitsubishi Lancer GTS, 2008
Mitsubishi Mirage Turbo, all
Mitsubishi Starion, all except Turbo
Mitsubishi Tredia Turbo, all
Nissan 200SX SE-R, 1995-1998
Nissan 200SX Turbo, all
Nissan 200SX V6 (160 HP), 1987 and later
Nissan 240SX, all including 16 valve
Nissan Altima 2.5, 2002 and later, all
Nissan Maxima, all except Class B and C lists
Nissan NX2000, all
Nissan Sentra SE, 2001 and later
Nissan Sentra SE-R, pre-1995
Nissan Sentra, 2000
Oldsmobile 88 LSS, supercharged, 1995 and later
Oldsmobile Achieva or Calais w/Quad-4, all including HO

Oldsmobile Alero V6, all
Oldsmobile Aurora, all
Oldsmobile Cutlass V6, 1997 and later
Oldsmobile Intrigue, all except DOHC V6
Oldsmobile Trofeo, all
Peugeot 405 Mi 16, all
Peugeot 505 gas Turbo, all
Peugeot 605 SR3.0, all
Plymouth Barracuda 340 cid or smaller V8 w/2bbl, 1964-1974 (See Class D Note)
Plymouth Laser 2.0 16 valve, 1989 and later, except Turbo
Plymouth Neon DOHC, all
Plymouth Neon, SOHC, 2000 and later
Plymouth Sundance Turbo, all except Class C list
Plymouth Turismo Turbo or TC-3 Turbo, all
Pontiac Bonneville SSE Supercharged, 1992-1994
Pontiac Bonneville, 1999 and later (except Supercharged)
Pontiac Fiero V6, all
Pontiac Firebird 2bbl V8, 1967-1981 (See Class D Note)
Pontiac Firebird V6, all except 1993 and later Series II
Pontiac G6, 200HP, 2006
Pontiac Grand Am 2.0 Turbo, all
Pontiac Grand Am Quad-4, all including HO
Pontiac Grand Am V6, 1999 and later
Pontiac Grand Prix GT, 1998 and later (Except GTP)
Pontiac Sunbird SE V6, 1991-1994
Pontiac Sunbird Turbo or J2000 Turbo, all
Pontiac Sunfire GT Quad-4, 1995 and later
Pontiac Vibe, 2003 and later
Porsche 356, all
Porsche 911 models, 129 HP or less
Porsche 912 or 914 4 cyl, all
Porsche 914 6 cyl, all
Porsche 924, all except Class C list
Renault Fuego Turbo, all
Saab 900S, all except V6 and Turbo
Saab Scania, all
Saab Sonnet, all
Saturn Astra XR, 2008
Subaru Forester XS, 2004
Subaru Legacy 2.5i, 2005
Subaru Legacy Turbo, all
Subaru XT6, all
Suzuki Kazashi, 2010
Suzuki SX4 Sportback, 2010 and later
Toyota Avalon, 2000-2004
Toyota Camry V6 w/5-speed, 1992-1996
Toyota Camry V6, 1997-2006 except 5-speed
Toyota Celica GT, 2000 and later
Toyota Celica GT-S, all pre-2000, except Turbo
Toyota Cressida with forced-air induction, all
Toyota Matrix, all except XRS, 2002
Toyota MR-2, all except Class B & Class C lists
Toyota Supra, 1978-1981 except Turbo
Toyota Tacoma (except X-Runner), 2005
Toyota Venza 4 cyl, 2009
Triumph TR-8, all
TVR, all except V8
Volvo S80, all except class B list
Volvo V40, all
Volvo, 240 Turbo, 740 Turbo or 940 Turbo, all
VW Corrado, all except V6 and Supercharged
VW Golf GTi 16 valve, all
VW Golf TDI, 2010
VW GTI 20 valve 150HP, 2000-2001
VW GTI VR6, 1995-1998
VW Jetta GLi 16 valve, all

VW Jetta TDI Cup, 2010 and later (SPA = 2)
VW Jetta TDI, 2010 and later
VW Passat 4 cyl. Turbo, 1998 and later
VW Passat V6, all except 3.6
VW Rabbit, 2006 and later
VW Scirocco 16 valve, all

8. Class E (ES, EP, EM)

This class includes all two wheel drive trucks with standard V4 or V6 engine, except Turbo, unless listed elsewhere.

Acura Integra, pre-1990
Alfa Romeo 164L, all
Alfa Romeo Spider, all
AMC Alliance GTA, all
AMC American, Concord, Gremlin, Hornet, Javelin or Spirit w/6 cyl, all
Audi 100, pre-1992
Audi 4000, all except Turbo
Audi 5000, all except Turbo
Audi 80, all, (SPA = -3)
Audi 90, all except 20 valve or V6
Audi A4, all except V6 or Turbo
Audi Coupe, all except Turbo or 20 valve
Austin Healey 3000, all
Austin Healey Sprite, all, (SPA = -3)
Austin Mini, all including Cooper S, (SPA = -3)
BMW 1600 or 1800, all
BMW 2002, all except tii
BMW 318i, all except 16 valve
BMW 320i, all
Buick Century V6, 1997 and later
Buick LeSabre FWD T-Type, all
Buick LeSabre FWD, pre-1999, all except T-Type, (SPA = -3)
Buick LeSabre, 1999 and later
Buick Regal, 1988 and later except 3.8
Buick Riviera, 1995 and later except supercharged
Buick Skyhawk V6, all
Buick Skyhawk, all except V6 and Turbo, (SPA = -3)
Buick Skylark V6 HO, pre-1992
Buick Skylark V6 w/AT, 1992 and later
Buick Skylark w/Quad-4, 1992 and later
Buick Skylark, all except Class D and other E listings, (SPA = -3)
Chevrolet Beretta 4 cyl., all except Class C, D, and other E listings, (SPA = -3)
Chevrolet Beretta V6, all except GT, GTU, GTZ and Z26
Chevrolet Camaro 6 cyl, 1967-1992
Chevrolet Caprice w/350 cid, all except Class C and D lists
Chevrolet Caprice, exc. Class D and other E listings, (SPA = -3)
Chevrolet Cavalier 4 cyl, 1995 and later
Chevrolet Cavalier V6, all except Z24
Chevrolet Celebrity, all, (SPA = -3)
Chevrolet Chevette, all, (SPA = -3)
Chevrolet Citation X-11, all
Chevrolet Corsica 4 cyl, all, (SPA = -3)
Chevrolet Corsica V6, all
Chevrolet Corvair, all except Turbo
Chevrolet Cruze Turbo (auto)
Chevrolet Impala, 2000 and later (except 3.8 V6)
Chevrolet Lumina Eurosport, all except DOHC or Z34
Chevrolet Lumina, all except Eurosport, (SPA = -3)
Chevrolet Malibu (hybrid), 2009
Chevrolet Malibu, 4-cyl., 1997 and later
Chevrolet Monte Carlo, 1994 and later except DOHC V6, 3.8 V6 or Z34
Chevrolet Monza 4 cyl, all, (SPA = -3)
Chevrolet Monza V6, all

Chevrolet Nova 16 valve, all
Chevrolet Nova 4 cyl, all except 16 valve, (SPA = -3)
Chevrolet Prism 1.8 DOHC, 1998 and later
Chevrolet Spectrum Turbo, all
Chevrolet Spectrum, all except Turbo, (SPA = -3)
Chevrolet Sprint Turbo, all
Chevrolet Sprint, all except Turbo, (SPA = -3)
Chevrolet Vega Cosworth, all
Chrysler Cirrus DOHC 4-cyl. or V6, all
Chrysler Concorde 24 valve, all
Chrysler Concorde V6, all except 24 valve, (SPA = -3)
Chrysler LeBaron V6, all
Chrysler LeBaron, all except V6 and Turbo, (SPA = -3)
Chrysler LHS, pre-1999
Chrysler Sebring 4 cyl. or V6, all
Datsun 1500 or 1600, all, (SPA = -3)
Datsun 2000, all except Class D list
Datsun 200SX, all
Datsun 310 or 310GX, all
Datsun 510, B210, F10, all, (SPA = -3)
Dodge Aries, Lancer, 600, Diplomat, Dynasty, all except turbo, (SPA = -3)
Dodge Avenger 2.0, all
Dodge Challenger 4 cyl, all
Dodge Charger, 1975-1985, except turbo, (SPA = -3)
Dodge Colt 16 valve, all except Turbo
Dodge Daytona 4 cyl, all except Turbo
Dodge Intrepid 24 valve, all except Autostick
Dodge Intrepid V6, all except 24 valve and Autostick, (SPA = -3)
Dodge Neon SOHC, pre-2000
Dodge Omni, all except turbo, (SPA = -3)
Dodge Shadow V6, all except Turbo and Shelby
Dodge Shadow, all except V6 and Turbo, (SPA = -3)
Dodge Spirit ES, all
Dodge Spirit, all except ES and RT, (SPA = -3)
Dodge Stratus 4 cyl., all except DOHC, (SPA = -3)
Dodge Stratus DOHC 4 cyl. or V6
Eagle Premier, all
Eagle Summit 16 valve, all except Turbo
Eagle Talon 1.8, all
Eagle Vision 24 valve, all except Autostick
Fiat 500 2011, and later
Fiat 850 spider, (SPA = -3)
Fiat X1/9 or Bertone, all
Ford Contour 4 cyl, all
Ford Cortina GT, all except Lotus
Ford Crown Victoria 4.6 or 5.0, 1997 and later
Ford Crown Victoria, all except Police Package
Ford Escort GT or EXP, 1986-1990
Ford Escort LX-E, 1991 and later
Ford Escort w/DOHC 2.0, 1997 and later
Ford Escort, all except Class D and other E listings, (SPA = -3)
Ford Festiva or Fiesta, all, (SPA = -3)
Ford Fiesta SES, 2011
Ford Focus DOHC 4-cyl, all (except GT or Turbo)
Ford Focus SOHC, 4-cyl, all, (SPA = -3)
Ford Mustang 4 cyl, all except turbo, (SPA = -3)
Ford Pinto, all, (SPA = -3)
Ford Probe 4 cyl, all except Turbo
Ford Taurus 3.8, all except police package
Ford Taurus w/DOHC V6, 1996 and later
Ford Taurus, all exc. Class C, D, and other E listings, (SPA = -3)
Ford Tempo 4cyl, all, (SPA = -3)
Ford Tempo V6, all
Ford Thunderbird V6, all except Supercharged
Geo Metro, all, (SPA = -3)
Geo Prism GSi or LSi, all

Geo Prism, all except GSi and LSi, (SPA = -3)
Geo Storm, all except GSi, (SPA = -3)
Honda Accord EX w/4cyl., 1994-1997
Honda Accord SE or LX, 1991-1993
Honda Accord V6, pre-1998
Honda Accord, 4 cyl, 1976-1989 (SPA = -3)
Honda Civic Del Sol, all except Si and VTEC
Honda Civic DX, 1996 and later
Honda Civic EX, 1992 and later
Honda Civic HX Coupe, 1996 and later
Honda Civic Hybrid, 2003 and later
Honda Civic, all except Class D & other E listings (SPA = -3)
Honda CRX HF, all, (SPA = -3)
Honda CRX, all except Class D and other E listings
Honda Fit Sport, 2007 and later
Honda Insight Hybrid, 2003 and later (SPA = -3)
Honda Prelude, all except Class B, C, and D lists
Hyundai Elantra 1.6, 1992 and later, (SPA = -3)
Hyundai Elantra 1.8, 1992 and later
Hyundai Excel and Accent, all, (SPA = -3)
Hyundai Scoupe, all except Turbo, (SPA = -3)
Hyundai Sonata 4-cyl or V6, 1998 and later
Hyundai Sonata V6, pre-1998
Hyundai Sonata, 4-cyl, pre-1999, (SPA = -3)
Hyundai Tiburon 1.8 or 2.0, 1997 and later
Infiniti G20, all
Infiniti J30, all Isuzu I-Mark Turbo, all
Isuzu I-Mark RS DOHC, all
Isuzu Impulse, all except Class C and D lists
Isuzu Stylus XS, all
Kia Rio, all, (SPA = -3)
Kia Sophia GS, all, (SPA = -3)
Kia Sophia LS, 1996 and later
Lancia Beta Coupe, all except HPE
Lexus ES250, all
Lincoln Continental Mark VI LSC, all
Mazda 2, 2011 and later
Mazda 323, all except Turb, (SPA = -3)
Mazda 626, all except Turbo or V6
Mazda 929, all except 929S
Mazda GLC, all, (SPA = -3)
Mazda Millennia, all except supercharged
Mazda MX-3 4 cyl, all, (SPA = -3)
Mazda MX-6, 1993 and later except V6
Mazda Protégé 4 cyl. DOHC, 1999 and later
Mazda Protégé EX, 1995-1998
Mazda Protégé LX, pre-1995
Mazda Protégé, all except pre-1995 LX and 1995 and later ES, (SPA = -3)
Mazda RX-2, RX-3, RX-4, all
Mercedes-Benz 190E 2.3 16 valve, all
Mercedes-Benz 190E 2.6 or C220, all
Mercedes-Benz 280C, all
Mercury Capri 4 cyl, 1969-1986, except Turbo, (SPA = -3)
Mercury Capri 6 cyl, 1972-1986
Mercury Capri, 1991 and later, all except Turbo
Mercury Cougar 4 cyl, 1999 and later
Mercury Cougar V6, all except supercharged, (SPA = -3)
Mercury Lynx XR-3, 1986 and later
Mercury Lynx/ LN7, all except other E listings, (SPA = -3)
Mercury Mystique 4 cyl, all
Mercury Sable 3.8, all
Mercury Sable w/DOHC V6, all
Mercury Sable, all except other E listings, (SPA = -3)
Mercury Topaz v6, all
Mercury Tracer LTS, all
Mercury Tracer, all except LTS, (SPA = -3)

MG Mini Cooper, all, (SPA =-3)
MGA, MGB, MGC, MG Midget, all, (SPA = -3)
Mitsubishi Cordia, all except Turbo
Mitsubishi Diamante, all
Mitsubishi Eclipse 1.8, all
Mitsubishi Galant ES 4cyl., 2004 and later
Mitsubishi Galant, all except Class C and D lists
Mitsubishi Mirage 16 valve, all except Turbo
Mitsubishi Mirage and Summit, all except 16-valve or Turbo, (SPA = -3)
Mitsubishi Summit 16 valve, all except Turbo
Mitsubishi Tredia, all except Turbo
Nissan 200SX, all except Class D list
Nissan Altima, all except Class B, C, and D lists
Nissan Cube
Nissan Leaf 2011
Nissan Pulsar NX Turbo, all
Nissan Pulsar SE, all
Nissan Sentra, pre-1991, (SPA = -3)
Nissan Stanza, 1989 and later
Nissan Versa 1.8S, 2007 and later
Oldsmobile 88, 1992 and later except supercharged
Oldsmobile Achieva SOHC 4cyl, all (SPA = -3)
Oldsmobile Achieva V6 w/auto trans, 1992 and later
Oldsmobile Achieva w/Quad-4, 1992 and later
Oldsmobile Alero 4 cyl, all
Oldsmobile Cutlass A-body FWD 3.1, all
Oldsmobile Cutlass A-body FWD, all except 3.1 (SPA = -3)
Oldsmobile Cutlass Calais, all except Quad-4
Oldsmobile Cutlass Supreme, 1988 and later except DOHC V6
Oldsmobile Firenza V6, all
Opel GT, all
Opel Manta, all
Peugeot 505, all except Turbo and Diesel
Plymouth Breeze DOHC 4 cyl, or V6, all
Plymouth Breeze, all except DOHC 4-cyl and V6, (SPA = -3)
Plymouth Colt 16 valve, all
Plymouth Colt, all except 16 valve, (SPA = -3)
Plymouth Duster or Sundance V6, 1993 and later
Plymouth Fire Arrow, all
Plymouth Laser, 1989 and later, except Class B and D lists
Plymouth Neon SOHC, pre-2000
Pontiac 6000 STE 3.1, all
Pontiac Bonneville SE or SSE, 1992-1998 except supercharged
Pontiac Bonneville, all except 1987 & later SE or SSE, (SPA = -3)
Pontiac Fiero 4 cyl, all
Pontiac Firebird 6 cyl, 1967-1992
Pontiac Grand Am SOHC 4 cyl, all, (SPA = -3)
Pontiac Grand Am V6 w/auto trans., 1992-1998
Pontiac Grand Am w/Quad-4, 1992 and later
Pontiac Grand Am, pre-1992, except Quad-4
Pontiac Grand Prix, 1988-1997, except Turbo and DOHC V6
Pontiac Phoenix ES 2.8 HO, all
Pontiac Sunbird V6, all except 1991 and later SE
Pontiac Sunfire, 1995 and later except Quad-4
Rover Sterling, all
SAAB 900, all except 900S, V6, or Turbo
SAAB 9000 and 9000S, all except Turbo
SAAB 99, all except Turbo
Saturn DOHC S-series, all
Saturn Ion Quad Coupe, 2004 and later
Saturn L-series V6, all
Saturn L-series, 4 cyl, all, (SPA = -3)
Saturn SOHC S-series, all, (SPA = -3)
Scion xA, all, (SPA = -3)
Scion xB, 2003-2007, (SPA = -3)
Smart, 2008, (SPA = -2)

Subaru GL Hatchback, all except Turbo, (SPA = -3)
Subaru Impreza, all except 2.5RS, (SPA = -3)
Subaru Impreza, all except Class C and F lists
Subaru Legacy, all exc. Turbo & Touring Wagon GT, pre-2000
Subaru Legacy, all except Turbo, (SPA = -3)
Subaru XT Coupe Turbo, all
Subaru XT Coupe, all except Turbo, (SPA = -3)
Sunbeam Alpine, all, (SPA = -3)
Suzuki Sprint or Swift, all except Turbo, (SPA = -3)
Suzuki Sprint Turbo, all
Suzuki Swift GT and GTi, all
Toyota Avalon, pre-2000
Toyota Camry V6, 1992-1996 except 5-speed
Toyota Camry, all except V6, (SPA = -3)
Toyota Celica ST, all (SPA = -3)
Toyota Celica, all except GT-S and ST
Toyota Corolla GTS, FX16, or 1.8 16 valve, all
Toyota Corolla, all except GTS, FX16, and 1.8 16-valve, (SPA = -3)
Toyota Cressida, all except Class D list, (SPA = -3)
Toyota Echo, all, (SPA = -3)
Toyota Paseo, all
Toyota Solara 4 cyl, all
Toyota Starlet or Tercel, all, (SPA = -3)
Toyota Yaris S, 2007 and later
Triumph GT6, all
Triumph TR-4, TR-4A, TR-250, TR-6, TR-7, all, (SPA = -3)
Volvo 142, 240, 760, all except Turbo, (SPA = -3)
Volvo 740 GLE, 940SE 16 valve, 850 GLT, 960, all
Volvo P1800, all
VW Beetle (new), all except Turbo, (SPA = -3)
VW Beetle and Super Beetle, all, (SPA = -3)
VW Golf GTI, all except 16 valve
VW Golf, all except C, D and other E listings, (SPA = -3)
VW GTI 1.8L, pre-1993, (SPA = -3)
VW GTI 2.0L 16V, pre-1993
VW GTI 2.0L, non-turbo, 1996-2000, (SPA = -3)
VW Jetta GLI, pre-1994, except 16 valve
VW Jetta, all except Class C, D, and E lists, (SPA = -3)
VW Karman Ghia or Quantum, all, (SPA = -3)
VW Passat, pre-1998, except V6
VW Rabbit, 1975-1984, all except GTI, (SPA = -3)
VW Scirocco, all except 16 valve

HPDE/Track Day

HPDE/Track Day Rules

1. HPDE/Track Day Description

An HPDE/Track Day is designed to learn performance driving techniques in a controlled environment or to shake down a race car. The day is not racing. No lap times are taken. The event is open to street and race cars: a competition license is required in the competition group. Drivers of all skills and abilities are welcome. Limited instruction may be available. Typically four groups comprised of Beginner, Intermediate, Advanced and Competition drivers rotate through on-track sessions of approximately 20 minutes each. Note: A more formal course of instruction with assigned instructors and feedback from experienced observers is available in the Midwestern Council Driver Schools.

2. General Regulations

The rules and regulations set forth herein are designed for the orderly conduct of HPDE/Track Day events and to establish minimum acceptable requirements for such events. These rules shall govern the condition of all Midwestern Council of Sports Car Clubs (MCSCC) HPDE events. By entering and participating in these events, all participants agree to comply with these rules and regulations and the supplemental regulations published with the event entry. These rules and regulations are intended as a guide for the conduct of the sport and are in no way a guarantee against injury or death to participants, spectators, guests, or others. No express or implied warranty of safety shall result from publication of or compliance with these rules and regulations.

2.1 The Contest Board, having promulgated these regulations, may modify, add to, delete from, or grant exceptions to these regulations at any time.

2.2 The event supplemental regulations for each event supersede the rules written in the MC General Competition Rules for that event ONLY.

2.3 The Contest Board reserves the right to prevent any entrant from participating in any MCSCC HPDE event. Likewise, the Chief Steward of the Event may prevent an entrant from participating in any MCSCC HPDE event. The event Chairman shall be responsible only for the administrative functions relative to planning, organizing, and running of the event. The Chief Steward of the Event shall have the final authority over the safety and general conduct of the event, pertaining to competitive matters, rules, regulations, interpretations, etc.

2.4 It shall be the responsibility of all participants to conduct themselves in a manner which is not prejudicial to the interest of the MCSCC or bringing unnecessary criticism to the MCSCC.

2.5 The Chief Steward of the event is the final authority for the general conduct of the event in accordance with these rules and the supplementary regulations for the event.

2.6 The Contest Board reserves the right to postpone or cancel any scheduled event.

2.7 The participant, in signing the entry form for any MCSCC event, elects to use the course of the event at his or her own risk, and thereby releases and forever discharges the MCSCC, together with its heirs, assigns, officers, representatives, agents, officials, employees, and others for death or any injury to body and/or reputation, that may be received by said participant, and for all claims of said injuries to parties listed above growing out of, or resulting from the event contemplated under the entry form, or caused by any construction or condition of the course over which the event is held.

2.8 By the mere fact of entering a MCSCC HPDE event, every participant or guest agrees to abide by the regulations and the supplementary regulations pertaining to that event, and recognizes as the only authority the Chief Steward of the Event, the Competition Director of the MCSCC, and above these, the Contest Board of the MCSCC.

2.9 Only officials may use motorcycles, mini-bikes, etc., in the paddock area.

2.10 Riding on the exterior bodywork on vehicles in the paddock is prohibited.

2.11 Only qualified instructors approved by the Chief Steward may ride as a passenger in any entered vehicle on the track.

2.12 Drivers are responsible for the conduct of their guests and crew.

2.13 Electric vehicles are prohibited at Blackhawk Farms Raceway. They may be considered at other tracks with Chief Steward approval pending track specific regulations.

2.14 Hybrid vehicles may be considered with Chief Steward approval pending track specific regulations.

3. Event Insurance

Insurance for the event shall meet the minimum requirements as established by the MCSCC Board.

4. Driver Groups

Drivers will be divided into groups based on experience and number of drivers. Typically there are three groups for Beginner, Intermediate, and Advanced drivers which are open to any driver. A fourth group is restricted to Competition License holders only.

MCSCC Championship Enduro Series Regulations

1. Enduro Definition

1.1 The "MCSCC Championship Enduro Series" must consist of a minimum of three (3) events per calendar year in order to be considered a championship series.

1.2 Each event shall be a minimum of one (1) hour duration to be considered part of the "MCSCC Championship Enduro Series".

1.2.1 Total length of each Enduro to be determined by the sponsoring club.

1.3 "MCSCC Championship Enduro Series" events are open to all Closed Wheel cars as listed in the current MCSCC General Competition Rules (here forward referred to as the MCSCC GCR).

1.3.1 Closed Wheel cars not listed in the current MCSCC GCR may be allowed to participate as UNR at the discretion of the Event Chief Steward.

1.4 All cars must conform to the current MCSCC GCR minimum safety standards

2. Enduro General Regulations

2.1 All Rules and Regulations published in the current MCSCC GCR apply with the following exceptions:

2.1.1 MCSCC permanent numbers will not be honored for Enduro events. Numbers will be assigned by the registrar on a first come - first served basis.

2.1.2 Any penalties incurred by a member of a team will be given to the team or the offending team member as determined by the event Chief Steward based on the specific infraction.

2.1.3 There will be one (1) mandatory pit stop, minimum five (5) minutes duration.

2.1.3.1 To be considered a finisher, a race car must complete one half (1/2) of the laps completed by the winner in the class entered. If the class winner completes an odd number of laps, divide that number by two (2) and round down to the nearest whole integer.

2.1.4 Championship Points

2.1.4.1 Only MCSCC licensed drivers running in the series events earn points toward the series championship as described in the GCR section 6. "Championship Points System". with the following exceptions:

2.1.4.1.1 To be eligible for the series championship, drivers must compete in a minimum of Sixty-seven (67%) percent of the scheduled "MCSCC Enduro Championship Series" events and finish at least fifty (50%) percent of the series scheduled events.

2.1.4.1.2 Points will be awarded to all registered drivers/co-drivers of MCSCC listed cars completing a minimum of thirty (30%) percent of the car's total race laps.

2.1.4.2 Drivers registered in more than one (1) car in a class will be awarded points based upon only the highest finishing position.

2.1.4.3 Point ties at the end of the season shall be resolved by the following:

2.1.4.3.1 Number of first place finishes, second place and so on until the tie is resolved including any dropped points.

2.1.4.3.2 If a tie cannot be resolved applying the above criteria, all tied drivers will be awarded the same finishing position in the championship.

2.1.5 Starting Positions

2.1.5.1 Practice and/or qualifying sessions are at the discretion of the event sponsoring club. If no practice/qualifying session is scheduled, the starting position will be based on class, with the fastest class starting first, the second fastest class starting second and so forth. Starting positions within each class will be set in the order in which the car arrives at grid.

2.1.1 Cars may enter the paddock without disqualification. Re-entry to the pit lane must be via the false grid with permission from the grid staff.

3. Identification

3.1 Car numbers, assigned by registration, must be legibly displayed on the front and both sides of the vehicle and conform to the requirements as listed in the current MCSCC GCR (min six (6) inches height with a one (1) inch stroke. It is recommended that the car number also be displayed on the back of the vehicle wherever possible.

3.2 Car Class must be displayed on both sides of the vehicle (min. four (4) inch height x one (1) inch stroke.

3.3 Car numbers must meet the approval of Timing & Scoring.

3.4 All cars are to display the MCSCC stickers (right side up) on the front and both sides of the vehicle. Logo stickers available at Tech.

4. Radios

Two-way radios are recommended, but not mandatory. If used by a team, the frequency should be noted on the entry form.

4.1 **NO TEAM RADIOS ARE ALLOWED TO USE THE FOLLOWING FREQUENCIES:** 151.625, 152.315, 154.514, 154.600, or 157.575 MHz.

5. Transponders

Minimum AMB Tranx 260 transponders are required for all entries. A limited number of transponders will be available for rental at registration.

GENERAL INFORMATION

6. Pit Assignments

Due to limited number of pit spaces, pit spaces will be assigned if more than forty (40) entries are received. Sharing of pit spaces may be necessary (2 teams in one space, 3 teams in two spaces, etc.) Please indicate, on the entry form, with which team(s) you would be willing to sharer.

6.1 Pit/Paddock Area: The pit area must be kept clear through the last event prior to the Endurance Race that uses the pits. Once the last event that uses the pits has vacated the area, equipment and support vehicles will be allowed in the pit area. Vehicles will be allowed to unload equipment from the pit lane if time allows. These vehicles must be removed from the pit lane once unloading is completed or by nightfall. All equipment supporting a team MUST fit between the guardrail and the fence within the length of the pit space

6.2 All pit spaces must display the placard if provided at registration displaying the car number and team name. Placards should be securely attached to the guardrail legible from the pit lane.

7. Entering the Paddock

During the Endurance Race, cars may enter the Paddock for repairs without disqualification. Paddock speeds MUST be observed. Failure to do so will result in penalties or disqualification. Re-entry to the track will be via false grid area, with permission of the Grid and/or Pit Lane staff.

8. Trophies

The host club will determine what trophies will be awarded.

9. Protests

All protests will be submitted by the DTR to the Chief Steward as per the W2W portion of the MCSCC GCR.

9.1 Interim Standings/Results/Scoring Protests: Hourly provisional standings will be posted if possible. Any discrepancies with the hourly posting or the OFFICIAL STANDINGS should be discussed by the DTR with the Chief Steward and the Timing & Scoring Chief within thirty (30) minutes of the posting time. If the discrepancy cannot be resolved, an additional thirty (30) minutes will be allowed for the lodging of an Official Protest with the Chief Steward. Provisional/Final results become Official one hour after posting.

10. Tech/Impound

All cars and safety equipment must be inspected at Tech to receive a Tech sticker which must be displayed on the car for the car to be allowed on the track.

10.1 All registered drivers must appear at Tech with the vehicle.

10.2 Annual Tech will NOT be honored for Endurance Races.

11. On-Course Refueling

Not allowed.

12. On-Course Disabled Vehicles

Disabled vehicles on course will first be moved to place of greater safety from which the vehicle will be towed into the pit lane or paddock area as requested by the driver or as decided by the attending safety crew.

13. Body Damage-Repairs-Engine Changes

13.1 Any vehicle suffering severe body damage may be prevented from continuing until satisfactory repairs are made and approved by the Chief Steward, Chief of Tech, or Chief of Impound.

13.2 For reasons of safety and space, lengthy repairs are to be made in the paddock area.

13.3 All vehicles must have the engine with which they start the race to be considered a finisher.

14. Sound Control

All vehicles will be monitored for sound levels and must remain below the limits set by the track (see track regulations). Any vehicle found to be violation will be Black Flagged, warned, and given the opportunity to resolve the issue. If the vehicle is unable to conform to the sound limits, it will be disqualified.

FLAGS AND PENALTIES

15. Waiving Yellow "All" (Full Course Yellow)

Slow to a “Reasonable” speed and NO PASSING. Pit lane will remain open.

16. Red Flag

In the event of a Red Flag, all corners will display waiving yellow and blacks. All cars will proceed at a greatly reduced speed, with no passing, to the pit road and report to their respective pit stall or stop on the main straight if already beyond the pit entrance when the Red is first displayed at Start/Finish.

16.0.1 Minimum penalty: Black flag, Stop and hold 60 seconds.

16.1 No work is permitted on pit lane to any car while the race is stopped (red flagged).

16.1.1 Minimum penalty: Black flag, Stop and hold 60 seconds.

16.2 Cars that are in the paddock area during a red flag will be held for one complete lap after the green flag before being allowed to reenter the course. Work may be performed in the paddock during a red flag.

16.3 THE CLOCK WILL CONTINUE TO RUN.

16.4 Re-Gridding, as necessary, will take place at the direction of the Grid personnel based upon the previously completely scored lap.

16.5 Red Flag time does NOT count towards any mandatory pit stop times.

16.6 If a red flag comes out while a team is performing a timed pit stop all work on the car must stop immediately and their pit stop clock must also stop. Work can commence on the car and the pit stop clock can continue counting again as soon as the first car re-enters the race track. (Example: 2 minutes and 50 seconds into a fueling pit stop the red flag is deployed, All fueling and other work must stop immediately. When the first car re-enters the track refueling and any other work can be restarted and the car can leave its pit box after an additional 2 minutes and 10 seconds has elapsed.)

16.6.1 Minimum penalty: Black flag, Stop and hold 60 seconds.

17. Penalty for Passing Under Yellow

The car incurs the penalty (regardless of who is driving at the time the infraction occurs) and will be Black Flagged.

17.1 First Offence – stop and go

17.2 Second Offence – stop and hold five minutes

17.3 Third Offence – Immediate Disqualification

18. Pit Rules

These rules will be strictly enforced

18.1 Driver Change Slips: Driver change slips must be turned in at the start of the race and any time a driver change takes place indicating a beginning and end of a driver shift. Details will be discussed at the Drivers Meeting.

18.2 Working Pit Area Safety: Each team must have at least one (1) ten (10) pound capacity or larger fire extinguisher and at least ten (10) pounds of absorbent material.

18.2.1 Minimum penalty: Black flag, Stop and hold 60 seconds.

18.3 Required attire in the working pits for anyone not involved in fueling of the race car is shorts or long pants, sleeved shirts and shoes that cover the entire foot.

18.3.1 Minimum penalty: Black flag, Stop and hold 60 seconds.

18.4 No sandals, high heels or bare feet.

18.5 Welding in the working pits is prohibited.

18.6 No children under the age of 18 are allowed in the pit area. Minors holding an MPL are allowed in the pit area.

18.7 NO SMOKING OR OPEN FLAME IS ALLOWED IN THE PIT/GRID AREA.

18.8 Speed: A REASONABLE SAFE SPEED WILL BE MAINTAINED ON PIT ROAD. PADDOCK SPEED LIMITS ARE TO BE OBSERVED AT ALL TIMES. Penalties will be assessed for violations.

18.9 Pit Stops – Personnel: Only five (5) crew members (not including drivers involved in the driver change and the fire extinguisher handler) will be permitted over the pit wall for the purpose of refueling, effecting mechanical repairs or to change tires during the race.

18.9.1 Minimum penalty: Black flag, Stop and hold 60 seconds.

19. Pit Lane Refueling Requirements

19.1 Dump cans only. Gravity-fed overhead re-fueling rigs are NOT permitted.

19.2 No more than fifty (50) gallons of fuel may be stored in your pit area at any time. All additional fuel must be stored in the paddock.

19.3 Driver must be out of the car and the engine turned off before the cell fuel/tank seal may be opened.

19.3.1 Minimum penalty: Black flag, Stop and hold 120 seconds.

19.4 One person is REQUIRED over the pit wall for the sole purpose of handling a fire extinguisher. This person does not count as one of the five people allowed to do work on the car and is NOT allowed to perform any other work on the car.

19.4.1 Minimum penalty: Black flag, Stop and hold 60 seconds.

19.5 All personnel (including the person with the fire extinguisher) involved in refueling MUST wear eye protection (e.g. goggles), face covering (balaclava and/or full-face helmet with closed face shield), gloves, Nomex or equivalent suit, socks and full coverage shoes,

19.5.1 Minimum penalty: Black flag, Stop and hold 60 seconds.

19.6 During refueling, no work may be performed under the car, by anyone fully inside the driver's compartment, or the side/end of the car where refueling is taking place. Work may be performed on the opposite side/end of the car and on the opposite two wheels during refueling.

19.6.1 Minimum penalty: Black flag, Stop and hold 60 seconds.

19.7 Excessive spilling of fuel during a pit stop is prohibited and will be penalized at the discretion of the Chief Steward.

19.7.1 Minimum penalty: Black flag, Stop and hold 60 seconds.

20. Pit Stop Times

20.1 One (1) pit stop, with a minimum five (5) minute duration, is required of all teams. This pit stop may not be made in the first 15 minutes of the race. Refueling and/or repairs may take place during this stop. A paddock stop is NOT a pit stop.

20.1.1 Minimum penalty: Black flag, Stop and hold as below.

Pit time 4:59.99 to 4:00.00 – Stop and hold 2 minutes
Pit time 3:59.99 to 3:00.00 – Stop and hold 4 minutes
Pit time 2:59.99 to 2:00.00 – Stop and hold 6 minutes
Pit time 1:59.99 to 1:00.00 – Stop and hold 8 minutes
Pit time 0:59.99 and lower – Stop and hold 10 minutes

20.2 All pit stops in which refueling takes place must be a minimum of 180 seconds (3 Minutes) in duration.

20.2.1 Minimum penalty: Black flag, Stop and hold as below.
Pit time 4:59.99 to 4:00.00 – Stop and hold 2 minutes
Pit time 3:59.99 to 3:00.00 – Stop and hold 4 minutes
Pit time 2:59.99 to 2:00.00 – Stop and hold 6 minutes
Pit time 1:59.99 to 1:00.00 – Stop and hold 8 minutes
Pit time 0:59.99 and lower – Stop and hold 10 minutes

20.3 All other pit stops, including driver changes, require NO minimum time.

20.4 Timing begins when the car comes to a complete stop.

20.5 It is the responsibility of the teams to determine the elapsed time of any timed stops. Spot checks will be made and penalties will be assessed if discrepancies are observed.

20.6 The only exception is, during the last thirty (30) minutes of the race a "splash and go" pit stop will be allowed for fueling with NO minimum pit stop time if the mandatory five (5) minute stop has been served.

20.6.1 Driver must be out of the car and the engine turned off and all refueling safety measures listed elsewhere must be adhered to for refueling.

21. Repair

21.1 Whenever a crew member is working beneath the car, the vehicle MUST be supported by a minimum of two (2) jack stands, with some kind of support under the jack stands to prevent damage to the pavement.

21.1.1 Minimum penalty: Black flag, Stop and hold 120 seconds.

21.2 Any repairs that require a crew member to get under the car in excess of three (3) minutes must be performed in the paddock, not the pit lane.

21.2.1 Changing tires, brake pads, or any other repairs that do not require someone to get under the car may be performed in the pit lane. It is recommended that lengthy repairs be done in the paddock.

22. Pit Signals

22.1 No one is allowed at the pit wall adjacent to the racing surface during the start of the race.

22.2 No more than two (2) team members will be allowed at the pit wall adjacent to the racing surface at any given time with the exception of the final lap.

22.3 No umbrellas or chairs are allowed at the pit wall adjacent to the racing surface.

23. Equipment Staging

23.1 The staging of equipment (fuel, wheels, jacks, etc.) and/or crew not signaling prior to a pit stop is not allowed on the pit road side of the guard rail until the race car has come to a complete stop.

23.1.1 Minimum penalty: Black flag, Stop and hold 60 seconds.

23.2 No materials or equipment may be stored on the pit road side of the grid/pit wall except by express permission of the Pit Marshal.

24. Clean Up

All items brought in must be removed. This includes, but not limited to, all construction materials, chairs, tires and liter.

Appendices

Appendix X: Safety Fuel Tanks

1. Capacity

There shall be no restriction of fuel capacity or dimension when installing safety fuel tanks. The installation of more than one tank is permitted.

2. Location

Location of the safety fuel tank shall be as close as possible to the location of the standard tank(s) except when safety aspects or dimensional limitations make this unfeasible or impossible. In no case shall the location of the safety tank in the automobile be more than 12" from the standard tank(s), nor shall the tank be located in the driver/passenger compartment.

3. Installation, Fittings, Lines

Internal body panels may be modified to accommodate the installation of safety fuel tanks as long as such modification serves no other purpose. All openings created by removal or modification of panels must be replaced with materials of the same type and gauge as those removed.

Filler caps, fuel pick-up openings and lines, breather vents and fuel filler lines shall be so designed and installed that if the car is partially or totally inverted, fuel shall not escape. If the fuel filler cap is located directly on the fuel tank, a check valve shall not be required provided the filler cap is of a positive locking type and does not incorporate an unchecked breather opening. If the fuel filler cap is not located directly on the fuel tank, a check valve must be incorporated in the fuel tank to prevent fuel escaping if the cap or filler neck is torn from the tank.

Fuel tank breathers must vent outside the car. The addition of a bulkhead between the driver/passenger compartment and the fuel cell is required. It is recommended that all lines and filler openings be incorporated in a single fitting located at the top of the fuel tank.

4. Recommended Safety Fuel Cell Specifications

4.1 Cells must be securely mounted. A fuel cell will consist of a fuel bladder in a fully enclosed container.

4.1.1 Fuel Bladder

4.1.1.1 Materials

Bladders shall be constructed and certified in accordance with FIA FT-3 or higher or SFI 28.3.

4.1.2 Container

4.1.2.1 GT and Production Category

The bladder must be installed in a container of a minimum of 20 gauge steel, .059 inch aluminum or .125 inch Marlex (HDPE) and be fully enclosed.

4.1.2.2 Sports Racing Category and Formula Cars

The bladder shall be completely enclosed in a container (which may be part of the structure of the chassis) securely mounted and having a minimum of 20-gauge steel, .059 aluminum or .125 Marlex (HDPE) for protection.

Appendix Z: Roll Bar Requirements

These specifications are mandatory and represent minimum requirements. Specific installations are subject to approval by the Chief Technical Inspector.

Acknowledgment is made to the California Sports Car Club Region of the SCCA for their work in developing much of the material, and to NASCAR, Inc. for their development of roll bar structures for closed cars.

Reference has also been made to the roll bar specifications published by the United States Auto Club, Canadian Automobile Sports Club, and the National Hot Rod Association.

1. Basic Design Considerations

1.1 The basic purpose of the roll bar is to protect the driver if the car turns over or is involved in a serious accident. This purpose should not be forgotten.

1.2 The top of the roll bar must be a minimum of 2 inches above the top of the driver's helmet when the driver is sitting in normal driving position (as near the roof as possible on closed cars) and shall not be more than 6 inches behind the driver.

1.3 The roll bar must be designed to withstand compression forces resulting from the weight of the car coming down on the roll structure, and to take fore-and-aft loads resulting from the car skidding along the ground on the roll structure.

The roll bar must be able to withstand three simultaneously applied loads:

1.5 G Lateral 5.5 Fore-and-aft 7.5 G Vertical

The induced loads being carried over into the primary structure.

1.4 The two vertical members forming the sides of the hoop shall not be less than 15 inches apart inside dimension. It is recommended that the roll bar extend the full width of the cockpit to provide maximum bearing area. The roll bar vertical members on Formula cars must be not less than 15 inches apart, inside dimension, at their attachment points to the uppermost main chassis member.

1.5 A system of head restraint, to prevent the diver's head from striking the underside of the roll bar hoop must be installed on all automobiles. This may be incorporated into the roll bar or cage. The head restraint must be padded with 1" thick high density foam.

1.6 No portion of the roll bar/ roll cage shall have an aerodynamic effect by creating a vertical thrust.

2. Material

2.1 The roll bar hoop and all braces must be of seamless DOM mild steel tubing or chrome molybdenum alloy steel such as SAE 4125 or SAE 4130. It is recommended that mild steel tubing be used as chromium alloys present difficulties in welding and must be normalized to relieve stress. Proof of the use of alloy steel will be the responsibility of the entrant

2.2 The size of the tubing shall be determined by the weight of the car. Minimum size requirements are:

Vehicle Race Weight	Mild Steel	Alloy Steel
Under 1700lbs	1.50" x .095" or 1.625" x 0.080"	1.375" x .080"
1701 to 2700lbs	1.50" x .095"	1.500" x .095"
Over 2700lbs	1.50" x .120"	1.625" x .095"

An inspection hole of at least 3/16" diameter (0.1875") must be drilled in a non-critical area of the roll bar hoop to facilitate verification of wall thickness.

Where bolts and nuts are used, the bolts shall be at least 3/8" diameter SAE Grade 5 or equivalent aircraft quality.

3. Fabrication

3.1 One continuous length of tubing must be used for the hoop member with smooth continuous bends and no evidence of crimping or wall failure. It is recommended that the radius of the roll bar hoop be such that the minimum outside width measured at a point 4 inches below its uppermost point is 12 inches. Whenever possible the roll bar hoop should start from the floor of the car and, in the case of tube frame construction, be attached to the chassis tubes by means of gussets or sheet metal webs in order to distribute the loads.

3.2 All welding must be of the highest possible quality with full penetration. Arc welding, particularly heliarc, should be used wherever possible. The welds should be inspected by magnaflux or dye penetrant after fabrication. Alloy steel must be normalized after welding.

4. Bracing

4.1 Full cockpit width roll bar hoops must have two fore and two aft braces, one on each side of the hoop, of tubing with dimensions at least equal to the minimum dimensions required for the main roll bar hoop. All roll bars must include a transverse brace from the top of the hoop on one side to the bottom of the hoop on the other side, or alternatively, to the bottom of a rearward brace required above.

4.2 Roll bar hoops on Formula cars and cars with partial width hoops may have either one fore/aft brace with a minimum dimension equal to the tubing required for the main hoop, or two fore/aft braces with a minimum dimension of 1.0" x .090" mild steel or .750" x .090" alloy steel.

4.3 The bracing must be attached as near as practical to the top of the roll bar hoop, but not more than 6" below the top of the hoop, and at an angle of at least 30° from vertical. If a single brace is used, it must be attached to the top of the main hoop.

4.4 If the fore/aft bracing must be removable, the connection between the roll bar hoop and the brace-rod must be of the double lug type fabricated from material at least 3/16" thickness and welded through a doubler or gusset arrangement

Removeable Roll Bar Brace Attachment Details

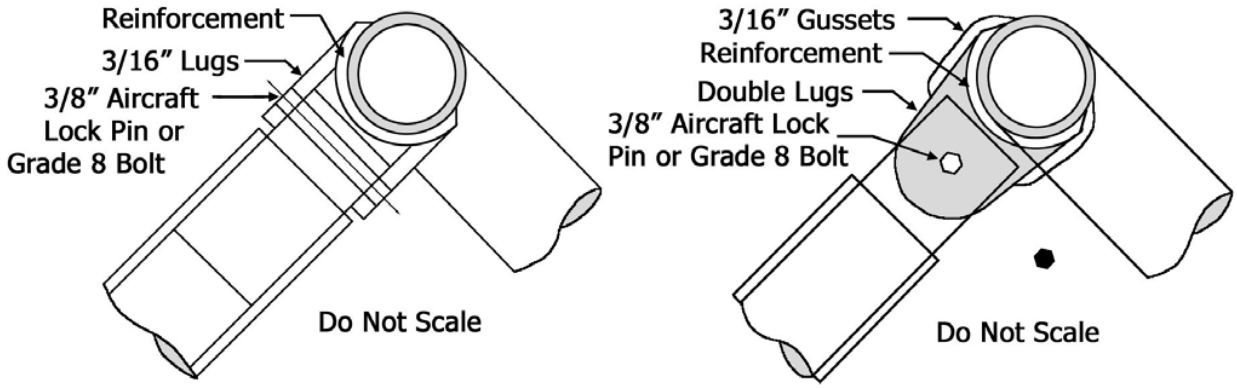

to avoid distortion or excessive strains caused by welding. (See diagram above.) It is recommended that the fore/aft brace be attached to a rear chassis member through a double lug connection. If attached to the engine, it must mount to a major component such as a head stud or combination of head studs.

5. Mounting Plates

5.1 Roll bars and braces must be attached to the frame of the car whenever possible. Mounting plates must be a minimum of 12 square inches. Mounting plates, regardless of whether welded or bolted to the frame, must be at least 3/16" thick.

5.2 In case of cars with unitized or frameless construction, or cars with frames where frame-mounting of the roll bar is impractical, mounting plates must be used to secure the roll bar structure to the floor of the car. Mounting plates shall be a minimum of 12 square inches. It is recommended that they have a minimum area of 1.5 square inches per each 100lbs. vehicle weight: The important consideration is that the load be distributed over as large an area as possible. Mounting plates bolted to the structure shall not be less than the minimum required wall thickness of the hoop with a backup plate of equal size and thickness on the opposite side of the panel with plates bolted together with a minimum of three each 3/8" grade 5 bolts.

6. Removable Roll Bars

Removable roll bars and braces must be very carefully designed and constructed to be at least as strong as a permanent installation. If one tube fits inside another tube to facilitate removal, the removable portion must fit tightly and must bottom on the permanent mounting, and at least two bolts must be used to secure each such joint. The telescope section must be at least 8" in length.

7. Installation on Cars of Space Frame and Frameless Design

7.1 It is important that roll bar structures be attached to cars in such a way as to spread the loads over a wide area. It is not sufficient to simply attach the roll bar to a single tube or junction of tubes. The roll bar must be designed in such a way as to be an extension of the frame itself, not simply an attachment to the frame. Considerable care must be used to add as necessary to the frame structure itself in such a way as to properly distribute the loads. It is not true that a roll bar can only be as strong as any single tube in the frame.

7.2 On cars of frameless construction, consideration should be given to using a vertical roll bar hoop of 360° completely around the inside of the car, and attached with suitable mounting plates. This type of roll bar then becomes a substitute for the frame.

8. Roll Cages

It is highly recommended that all cars employ a roll cage as stated in ***Appendix ZZ.***

Drawings of Cross-Sectional Top View of One Leg

Figure 1

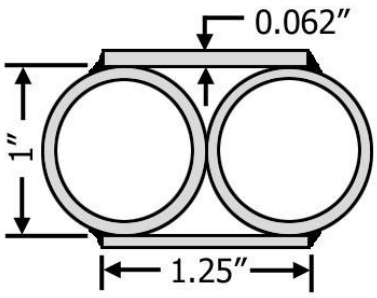

Front / Rear

Figure 2

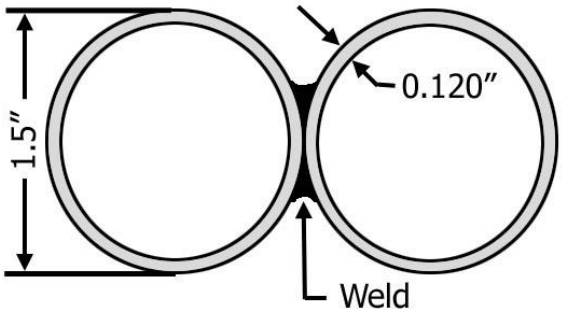

Front / Rear

Removable Roll Bar Braces
Attachment Details

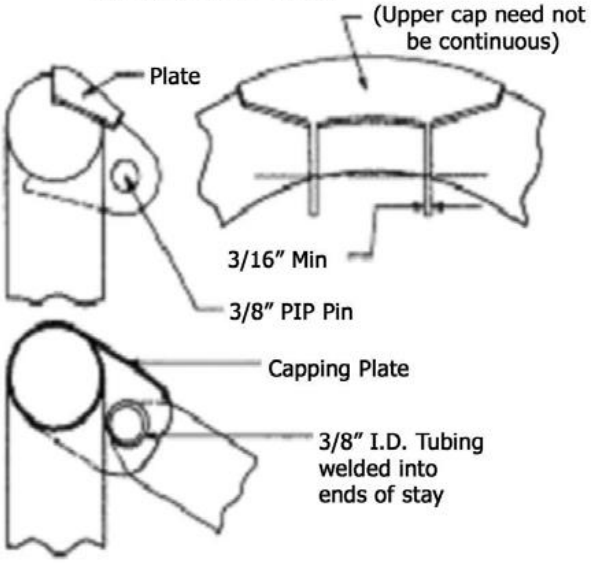

Drawing No. 1

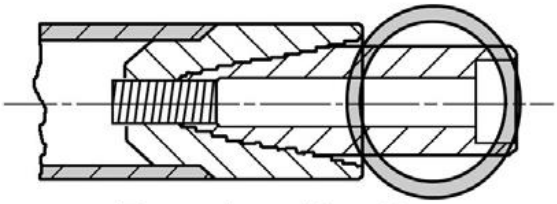

Drawing No. 2

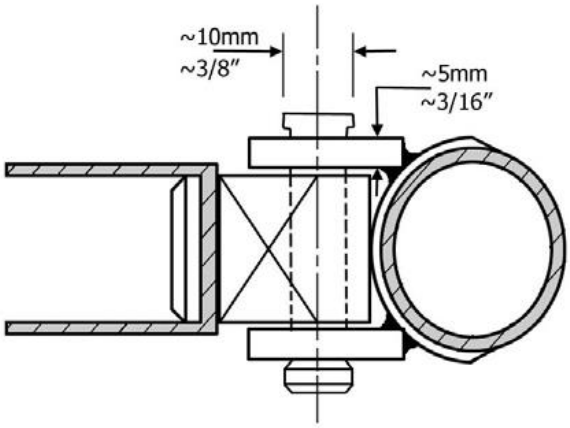

Drawing No. 3

Drawing No 4

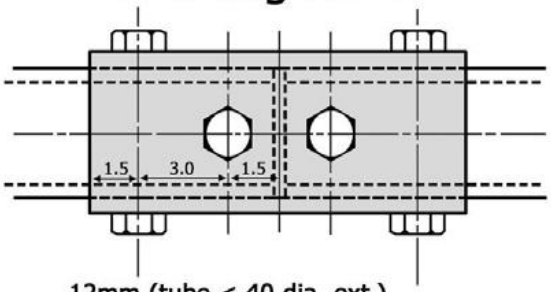

12mm (tube < 40 dia. ext.)
0 = 14mm (tube > 40mm < 50mm dia. ext.)
18mm (tube > 80mm dia. ext.)

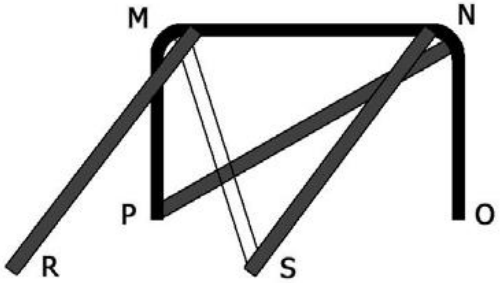

The Lateral brace must be fitted either from M-O, from N-P, M-S, or N-R

Drawing No. 7

Roll Bar Attachment to
Integral Chassis Type of Car

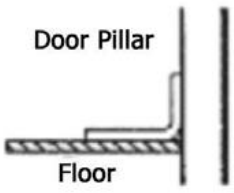

Drawing No. 5

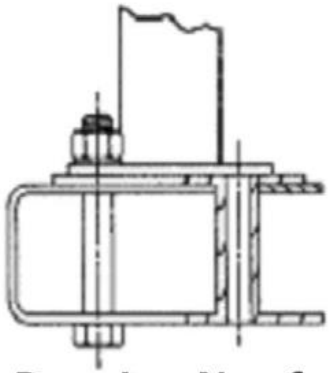

Drawing No. 6

Appendix ZZ: Roll Cage Recommendations

It is HIGHLY RECOMMENDED that full roll cages be installed in all cars where satisfactory installation can be achieved without major structural modifications. (SCCA Roll Cage Requirements)
Specific installations are subject to approval by the Chief Technical Inspector.

1. Basic Design Considerations

1.1 The basic purpose of the roll cage is to protect the driver if the car turns over, runs into an obstacle such as a guardrail or catch fence or is struck by another car. It must be designed to withstand compression forces from the weight of the coming down on the roll-over structure and to take fore and aft and lateral loads resulting from the car skidding along the ground on its roll-over structure.

1.2 A system of head restraint to prevent whiplash and prevent the driver's head from striking the underside of the roll bar must be installed on all vehicles. The head restraint must have a minimum area of 36 square inches and be padded with a non-resilient material such as Ethafoam or Ensolite or other similar material with a minimum thickness of 1". The head restraint must be capable of withstanding a force of 200lbs in a rearward direction.

1.3 Forward braces and portions of the roll bar hoop subject to contact by the driver's helmet (as seated normally and restrained by his/her restraint system) must be padded with a protective padding of non-resilient material such as Ethafoam or Ensolite or other similar mater with a minimum thickness of ½".

1.4 No portion of the safety roll cage shall have an aerodynamic effect by creating a vertical thrust.

2. Material

2.1 Seamless or DOM (drawn over mandrel) mild steel tubing (SAE 1010, 1020, 1025) or equivalent or alloy steel tubing (SAE 4125, 4130) (T-45). Alloy steels (proof of which is the responsibility of the entrant) must be normalized to relieve stress after welding.

2.2 An inspection hole of at least 3/16" diameter must be drilled in a non-critical area of the roll bar hoop to facilitate verification of wall thickness. All bolts and quick release pins must be of minimum diameter of 3/8" SAE Grade 5 or equivalent aircraft quality.

3. General Construction

3.1 One continuous length of tubing must be used for the hoop member with smooth continuous bends and no evidence of crimping or wall failure. The radius of bends in the roll bar hoop (measured at centerline of tubing) shall not be less than 3 times the diameter of the tubing. Whenever possible, the roll bar hoop should start from the floor of the car, and in the case of tube frame construction, be attached to the chassis tubes by means of gussets or sheet metal webs to distribute the loads. It is recommended that gussets be used at all joints.

3.2 All welding must be of the highest possible quality with full penetration and must be done according to A.S.T.M specifications for the material used. Arc welding, particularly heliarc, should be used wherever possible. Welds should be inspected by magnaflux or dye penetrant after fabrication. Alloy steel must be normalized after welding.

3.3 Aluminum bronze or silicon bronze welding technique is permitted, but extreme care must be used in preparation of parts before bronze welding in the design of the attaching joints.

4. Formula and Sports Racing Cars

4.1 Main Hoop (behind driver)

4.1.1 Tubing size (minimum)

1.375" x .080"	Alloy Steel
1.50" x .120"	Mild Steel

4.1.2 Vertical members must not be less than 15" apart (inside dimensions) at their attachment to the uppermost main chassis member.

4.1.3 In sports racing cars the main hoop (behind the driver) may be of either full cockpit width or partial cockpit width (behind the driver only). If full cockpit width, it must incorporate a lateral brace of equal dimension tubing to the main hoop. (See drawing No. 7 for alternate bracing location.)

4.2 Front hoop may be low hoop near dashboard, but at least as high as the top of the steering wheel rim OR a high front hoop, similar to the rear hoop, but without lateral brace.

4.2.1 Tubing size (minimum)

1.375" x .080"	Alloy Steel
1.50" x .120"	Mild Steel

4.2.2 A fabricated sheet metal structure or cars of full monocoque construction may be approved upon specific application.

4.2.3 Height – A straight line drawn from the top of the main roll bar hoop to the top of the forward hoop or structure must pass at least 2" over the driver's helmet when the driver is seated in normal driving position.

4.3 Bracing

4.3.1 **Front Hoop** – There must be two braces extending forward from the front hoop so as to protect the driver's legs. It is recommended that this bracing extend forward to the bulkhead in front of the driver's feet, but in all cases must be integrated into the frame or monocoque so as to provide substantial support for the front hoop. The tubing for these braces must not be smaller than 1.0" diameter x .080" wall thickness alloy steel or 1.375" x .080" mild steel.

4.3.2 **Rear Hoop – Partial cockpit width** Sports Racer or single seat Formula or Sports Racing Cars. There must be two braces extending forward (not smaller than 1.0" diameter x .080" wall thickness alloy steel or 1.375" x .080" mild steel) attaching to the frame, monocoque or front hoop. In addition, there must be either one brace (not smaller than 1.375" x .080" alloy steel or 1.50" x .120" mild steel) extending rearward and attaching to the frame, cross member of other substantial chassis component.

4.3.3 **Rear Hoop – Full cockpit width** Sports Racer. There must be two braces extending forward (not smaller than 1.0" x .080" alloy steel or 1.375" x .120" mild steel) attaching to the frame, monocoque or front hoop. In addition, there must be two braces extending rearward (not smaller than 1.375" x .080" alloy steel or 1.50" x .120" mild steel) attaching to the frame, cross member or other substantial chassis component.

4.3.4 Forward and rear facing bracing must be attached as near as possible to the top of the main hoop (not more than 6" below the top) and at an included angle of at least 30°.

4.3.5 Removable bracing must incorporate connectors of the double lug type or tapered connections or muff connections as shown in the accompanying drawings. The double lug type must include a doubler, gusset, or capping arrangement so as to avoid distortion or excess strain caused by welding (see drawings 1, 2, and 3 on prior page).

4.4 **Mounting Plates:** The thickness of mounting plates bolted, riveted, or welded to the structure of the car shall not be less than the thickness of the roll hoop or brace they attach.

5. Open Production Cars

5.1 Minimum tubing sizes for front and main hoops and all required bracing:

Vehicle Race Weight	Mild Steel	Alloy Steel
Under 1700lbs	1.50" x .095" or 1.625" x 0.080"	1.375" x .080"
1701 to 2700lbs	1.50" x .095"	1.500" x .095"
Over 2700lbs	1.50" x .120"	1.625" x .095"

For purpose of determining tubing sizes, the vehicle race weight is as raced without fuel and driver.

5.2 The front hoop may be either a low hoop (below the driver's eye level) near the dashboard or a high front hoop (similar to the rear hoop) but without lateral brace.

5.3 The main hoop (behind the driver) may be either the full width of the cockpit or a partial cockpit (only behind the driver).

5.4 Height of the two loops must be so that an imaginary straight line drawn from the top of the main roll bar hoop to the top of the front hoop passes at least 2" over the driver's helmet when the driver is seated in normal driving position.

5.5 Bracing

5.5.1 Cars with a low front hoop must have two braces extending forward so as to protect the driver's legs. It is recommended that this bracing extend to the bulkhead in front of the driver's feet, but in any case, must be integrated into the frame or monocoque so as to provide substantial support for the front hoop.

5.5.2 Cars with a high front hoop (above driver's eye level) must have two braces connecting the front and rear hoops together at each side of the tops of the roll hoops or alternatively use two side hoops following the line of the front door pillars extending upwards above the driver's eye level then bending horizontally to the rear and attaching to the main hoop. These two side hoops must be connected together over the top of the windshield by a tube above the driver's eye level.

5.5.3 The main roll hoop of full cockpit width must incorporate a diagonal lateral brace to prevent lateral distortion of the hoop (see drawing No.7 on prior page).

5.5.4 The main roll hoop, either full cockpit width or partial cockpit width, must have two braces extending forward attaching to the front hoop and two braces extending to the rear attaching to the frame of the chassis.

5.5.5 All braces must be attached as near as possible to the top of the main hoop (not more than 6" below the top and at an included angle of at least 30°).

5.5.6 Removable Bracing – Any removable bracing must incorporate connectors of the double lug type, tapered connection or muff connection as shown in the accompanying drawings. The double lug type must include a doubler, gusset, or capping arrangement so as to avoid distortion or excessive strains caused by welding.

5.6 **Mounting Plates:** Mounting plates bolted to the structure of the car shall not be less than .1875 (3/16) inch thick with a backup plate of equal size and thickness on the opposite side of the panel with the plates through bolted together. There must be a minimum of 3 bolts per mounting plate. All hardware must be Grade 5 or better. Mounting plates welded to the structure of the car shall not be less than .080" thick. Whenever possible, the mounting plate shall extend onto a vertical section of the structure such as a door pillar.

5.7 **Side Protection**: The minimum side protection must consist of a horizontal tube not less than 1.50" x .095" connecting the front and rear hoops across the driver's door opening. Additionally, there must also be either a diagonal tube from the front hoop bisecting the door opening below the horizontal side tube, or not less than 2 horizontal side tubes not less than 1.50" in diameter x .095" wall thickness. Additional tubing may be added.

6. Closed Cars

6.1 Minimum tubing sizes for front and main hoops and all required bracing:

Vehicle Race Weight	Mild Steel	Alloy Steel
Under 1700lbs	1.50" x .095" or 1.625" x 0.080"	1.375" x .080"
1701 to 2700lbs	1.50" x .095"	1.500" x .095"
Over 2700lbs	1.50" x .120"	1.625" x .095"

6.2 Main roll hoop (behind the driver) must extend the full width of the driver/passenger compartment and must be as near the roof as possible. It must incorporate a diagonal lateral brace to prevent lateral distortion of the hoop (see drawing No. 7).

6.3 The front hoop must follow the line of the front pillars and be connected by horizontal bars to the main hoop at each side of the top. Alternately, two side hoops following the line of the front top of the windshield (as close to the roof as possible) then horizontally to the rear attaching to the main hoop. These two side hoops are to be connected together by a tube over the top of the windshield.

6.4 The minimum side protection must consist of a horizontal side tube not less than 1.50" x .095" connecting the front and rear hoops across the driver's door opening. Additionally, there must also be either a diagonal tube from the front hoop bisecting the

door opening below the horizontal side tube, or not less than 2 horizontal side tubes not less than 1.50” x .095”. Additional tubing may be added.

6.5 Bracing

6.5.1 The main roll hoop must have two braces extending forward to the front hoop or forming the uprights of the front hoop and two braces extending to the rear attaching to the frame and chassis.

6.5.2 All braces must be attached as near as possible to the top of the main roll hoop (not more than 6” below the top and at an included angle of at least 30°).

6.6 Mounting Plates: Mounting plates bolted to the structure of the car shall not be less than .1875 (3/16) inch thick with a backup plate of equal size and thickness on the opposite side of the panel with the plates through bolted together. There must be a minimum of 3 bolts per mounting plate. All hardware must be Grade 5 or better. Mounting plates welded to the structure of the car shall not be less than .080” thick. Whenever possible, the mounting plate should extend onto a vertical section of the structure such as a door pillar.

7. Removable Roll Cages

7.1 Removable roll cages and braces must be very carefully designed and constructed to be at least as strong as a permanent installation. It on tube fits inside another tube to facilitate removal, the removable portion must fit tightly and must bottom by design, on the permanent mounted tube, and at least two bolts must be used to secure each such joint. The telescope section must be at least 18” in length (see drawing No. 4). Removable bracing sections (compression loading only) may use 3 bolts flange (min 3/16”).

8. Installation on Cars of Space frame and Frameless Design

8.1 It is important that roll cage structures be attached to cars in such a way as to spread the loads over a wide area. It is not sufficient to simply attach the roll cage to a single tube or junction of tubes. The roll cage must be designed in such a way as to be an extension of the frame itself, not simply an attachment to the frame. Considerable care must be used to add necessary strength to the frame structure itself in such a way as to properly distribute the loads. It is not true that a roll cage can only be as strong as any single tube in the frame.

8.2 On cars of frameless construction, consideration should be given to using a vertical roll hoop of 360° completely around the inside of the car, and attached with suitable mounting plates. This type of roll hoop then becomes a substitute for the frame.

9. Other Roll Cage Designs

Roll cages of alternate material or design may be accepted upon presentation of data verifying the installation is able to withstand three simultaneously applied loads:
1.5 G Lateral, 5.5 G Fore and Aft, 7.5 G Vertical
However, tubing sizes for front and rear hoops of less than 1.375” x .080” alloy steel or 1.50” x .095” mild steel will not be accepted.

10. Driver’s Seat

The driver’s seat must be firmly mounted to the structure of the car. In cars where the seat back is upright (most common in sedans and production cars) the back of the seat must be firmly attached to the main roll hoop, or its cross bracing, so as to provide both fore/aft lateral support.